X30 125cc RL USA TaG

FEATURES	
Cylinder volume	123.67 cm³
Bore	54 mm
Max. bore	54.35 mm
Stroke	54 mm max.
Cooling system	Water
Inlet system	Reed valve
Cylinder / crankcase transfers n°	3
Inlet / exhaust ports number	3
Combustion chamber shape	Spherical
Selettra ignition	Digital “S”
RPM limiter	Yes
Centrifugal Dry Clutch	*Yes*
Electric starter	*Yes*

Carburettor	Tillotson HW-27A Ø27 mm
Number of piston rings	1
Big end conr. bearing diam.	20x26x15
Crankshaft bearing diam.	30x62x16
Small end conr. bearing diam.	14x18x17.5
Distance between conrod centers	102 mm
Balancing shaft	*Yes*

DESCRIPTION OF THE MATERIAL	
Conrod material	Steel
Crankshaft material	Steel
Balancing shaft material	Steel
Gears material	Steel
Starter ring material	Steel
Head material	Aluminium
Cylinder material	Aluminium
Liner material	Cast iron
Crankcase material	Aluminium
Piston material	Aluminium
Piston rings material	Cast iron
Exhaust muffler material	Sheet-steel
Ball-bearings	6206 type

PISTON

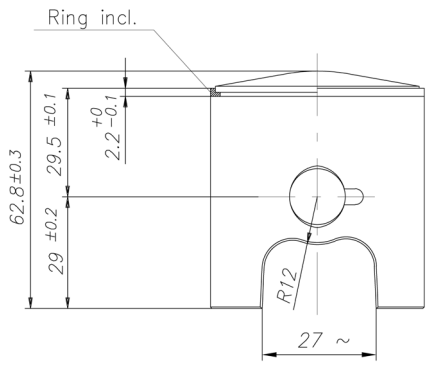

Piston min. weight (ring incl.) 128 g

DISTANCE BETWEEN CONROD CENTERS

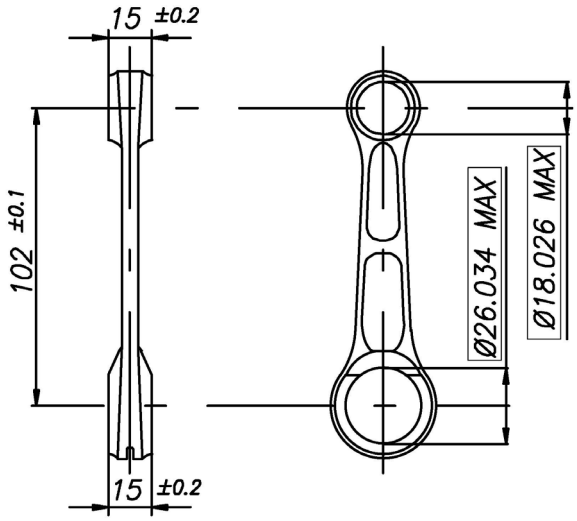

Min. weight 110 g

CRANKSHAFT

Piston pin min. weight 28 g

Crankpin min. weight 116 g

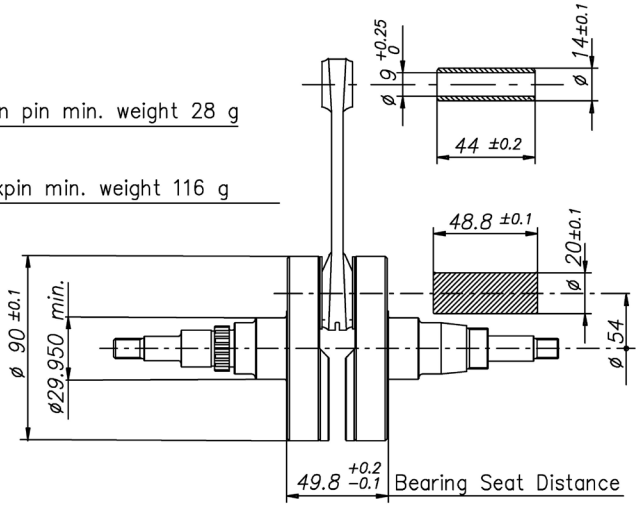

Complete crankshaft min. weight 2150 g

BALANCING SHAFT

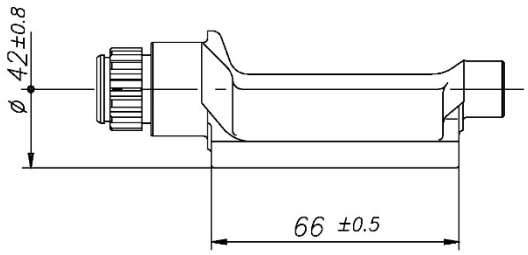

Min. weight 315 g

CRANKSHAFT BEARINGS

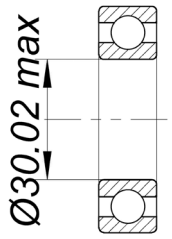

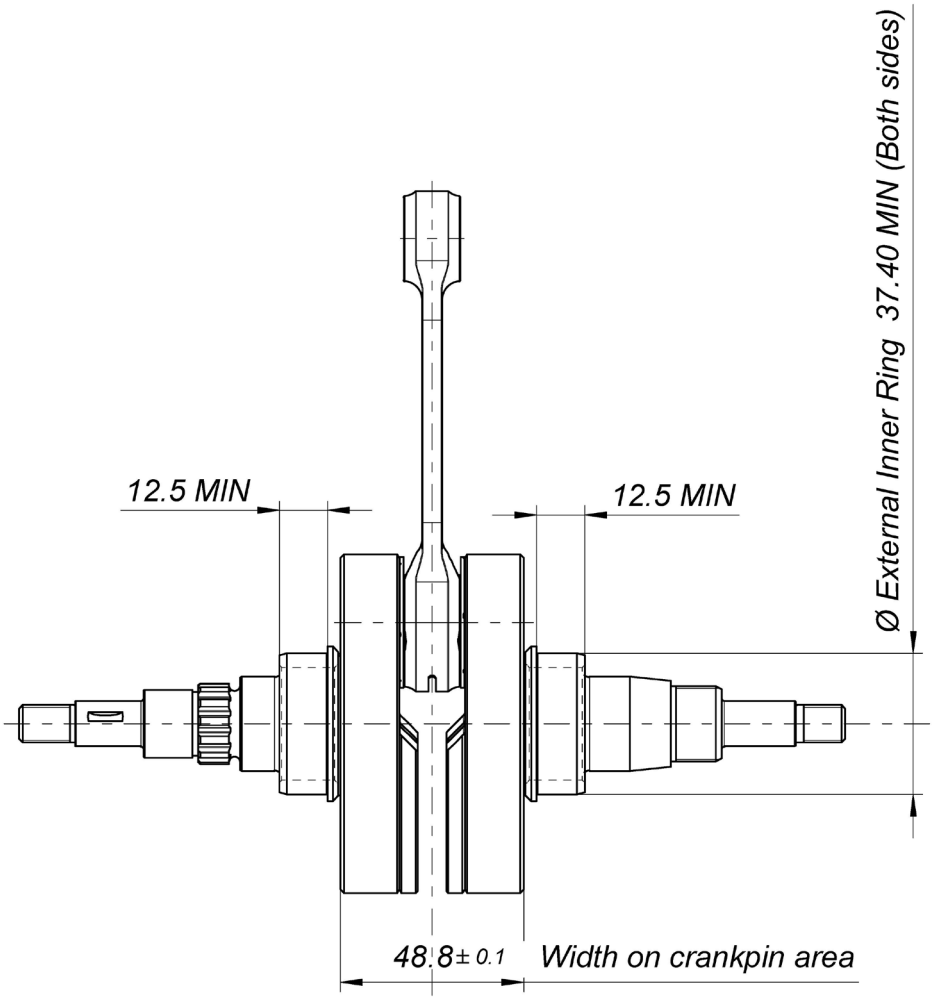

Crankshaft complete min. Weight 2220 g

MAIN ROLLER BEARING

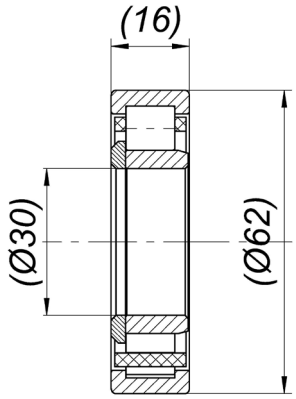

CYLINDER DEVELOPMENT

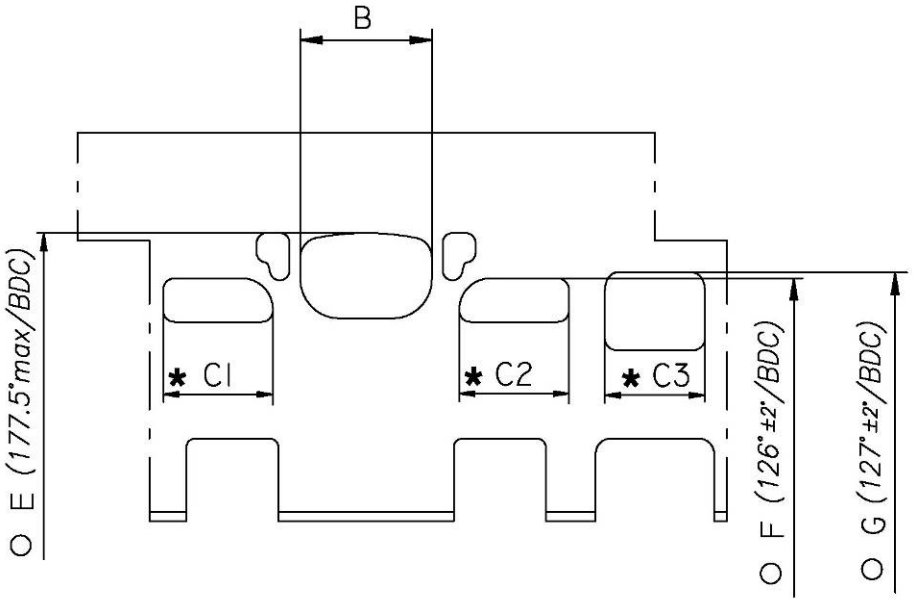

B	≤ 36.5 mm
C1 = C2	≤ 30 mm
C3	≤ 28.5 mm
E	177.5° max
F	126° ± 2°
G	127° ± 2°

* *CHORDAL READING*

O *ANGULAR READING BY INSERTING A 0.2x5 mm GAUGE*

CYLINDER CROSS SECTION VIEW (without or with pin)

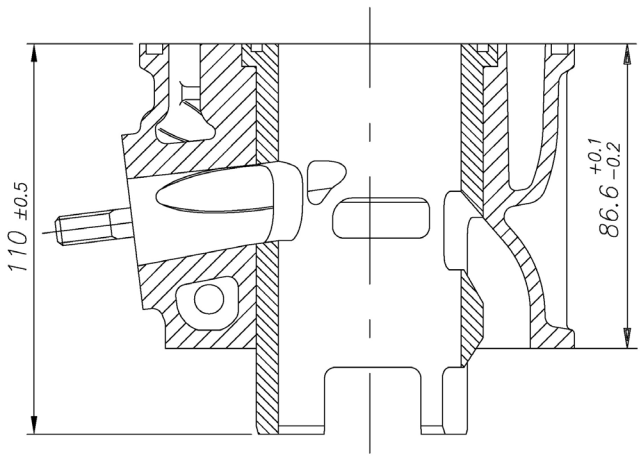

FROM 2014 ON

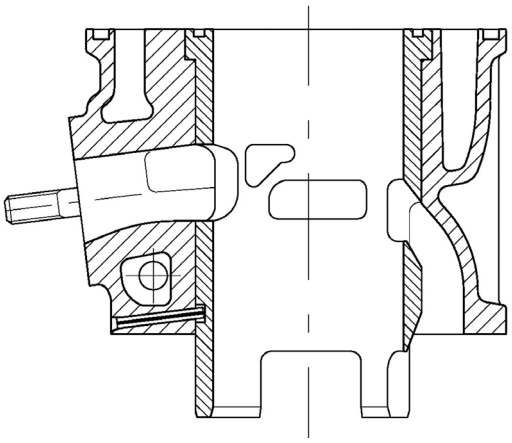

COMBUSTION CHAMBER VIEW	CYLINDER BASE VIEW
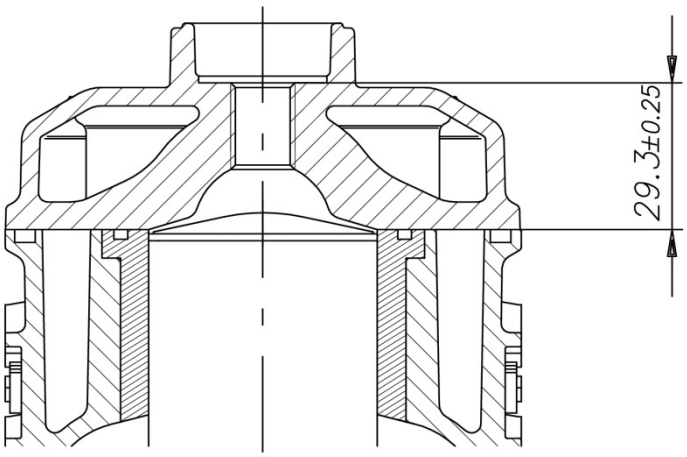 **SQUISH MIN.= 0.0354" (0.9 mm)** **(measured with 0.0625" (1/16") / Ø1.6mm solder)**	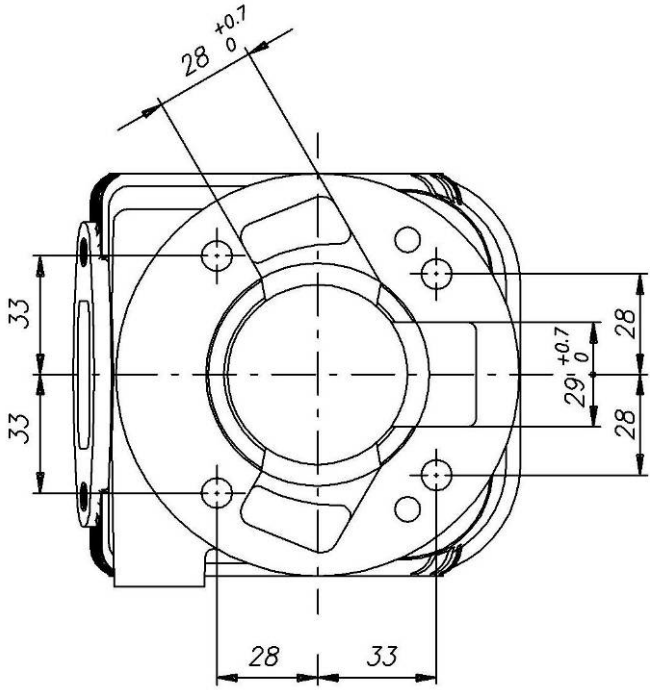
INLET CONVEYOR DIMENSIONS	**CRANKCASE INSIDE VIEW**
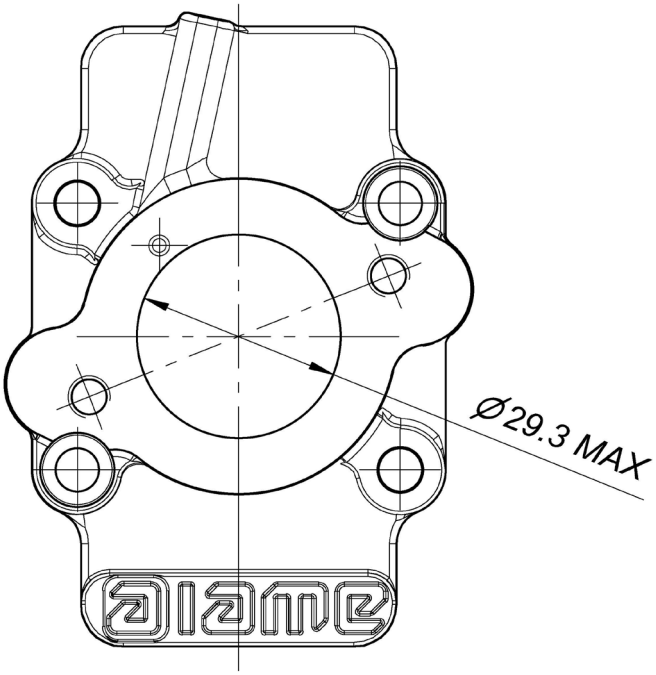	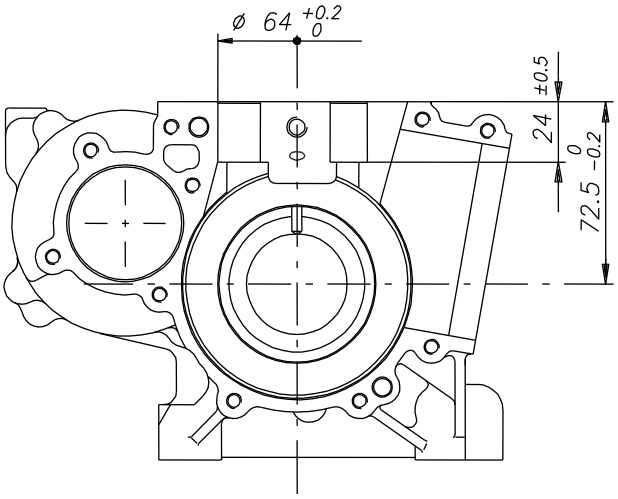

INLET SILENCER – DRAWING

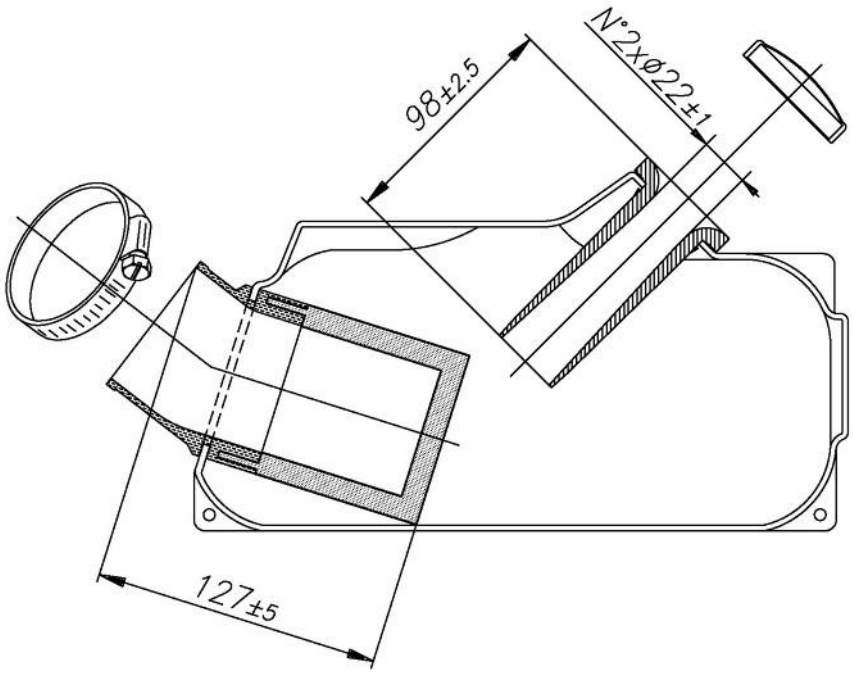

WITH MANIFOLD SPONGE OF AIR FILTER

INLET SILENCER - PHOTO

ALTERNATIVE INLET SILENCER – DRAWING

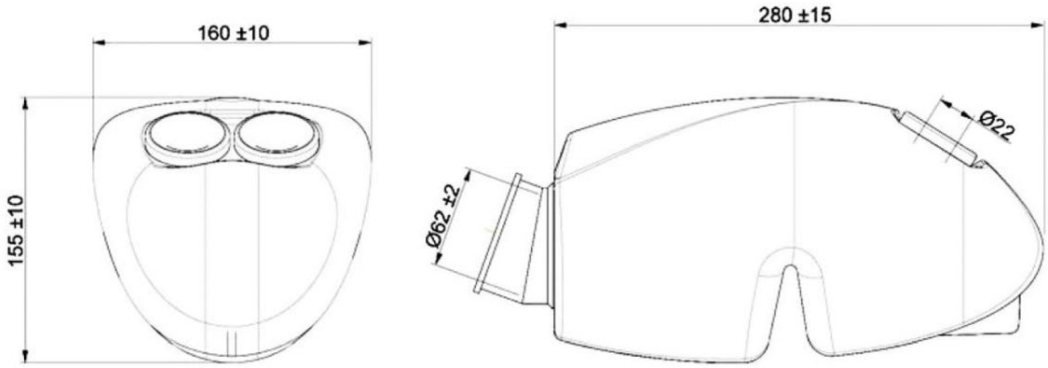

WITH MANIFOLD SPONGE OF AIR FILTER

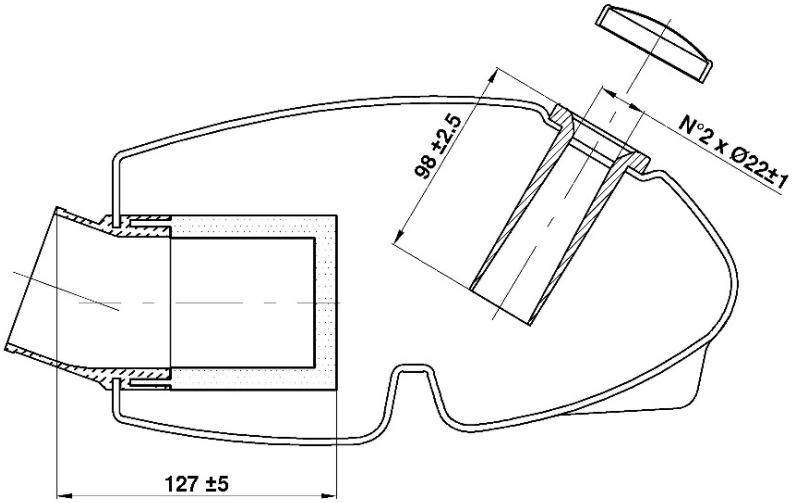

ALTERNATIVE INLET SILENCER - PHOTO

RAIN COVER FOR ALTERNATIVE INLET SILENCER – DRAWING

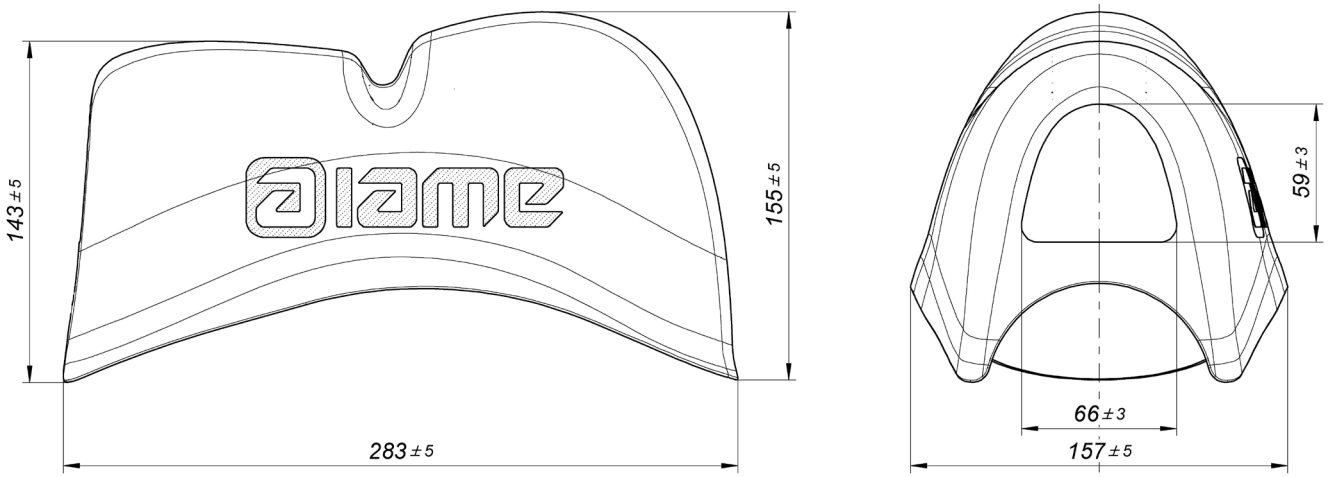

RAIN COVER FOR ALTERNATIVE INLET SILENCER - PHOTO

REED VALVE - DIMENSIONS AND MARKING

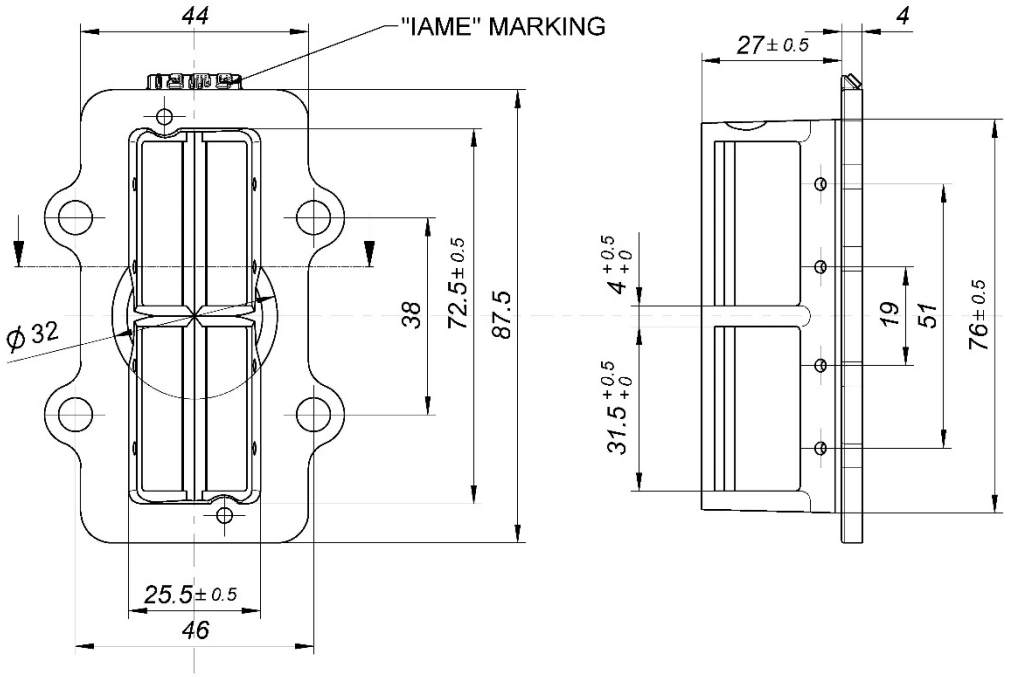

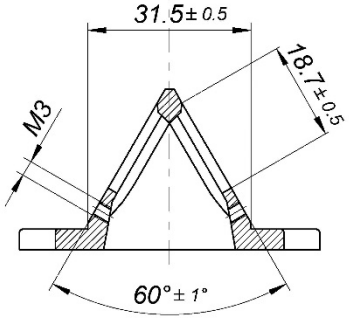

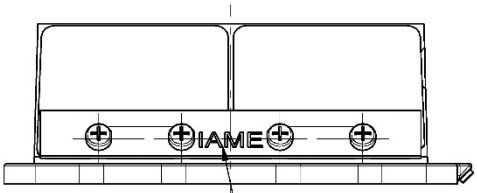

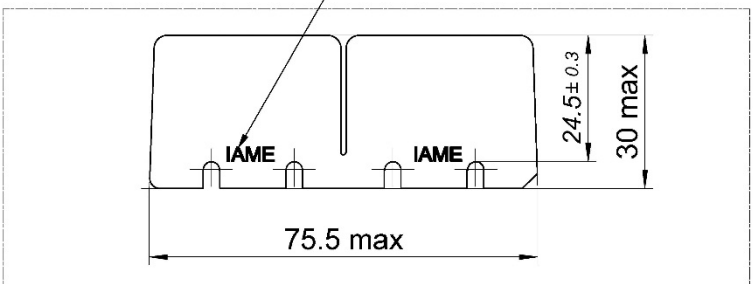

Genuine IAME fiber glass reeds min. thickness 0.30mm

DESCRIPTION OF THE CLUTCH

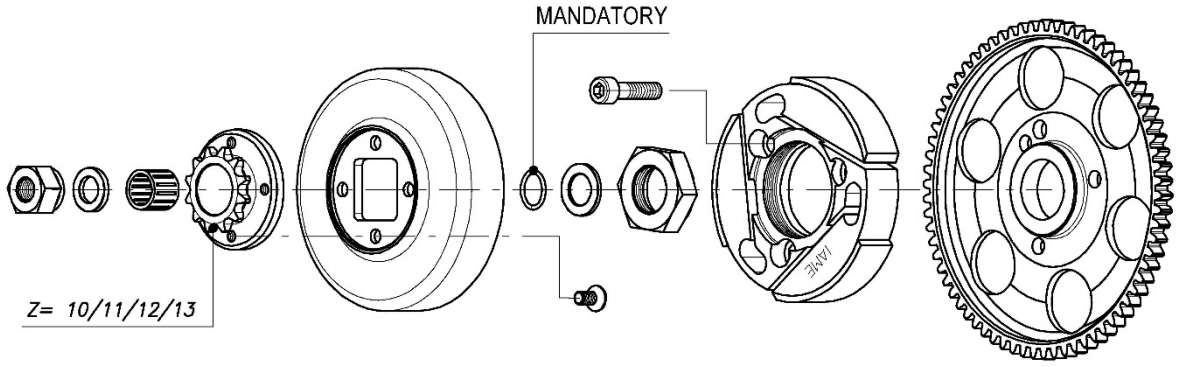

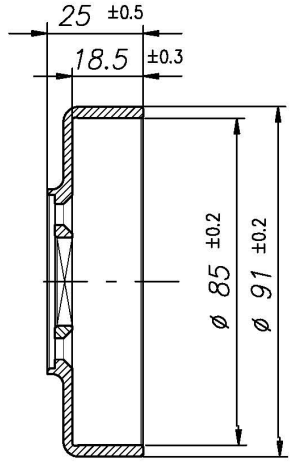

Min. weight 225 g

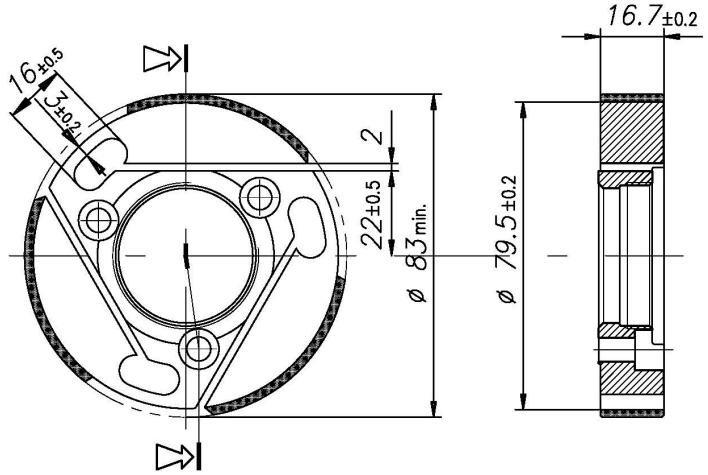

Min. weight 375 g

DESCRIPTION OF THE CLUTCH

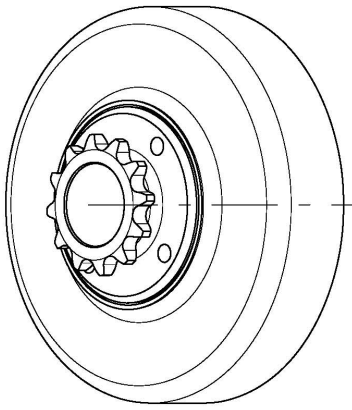

Min. weight 300 g
Poids min. 300 g

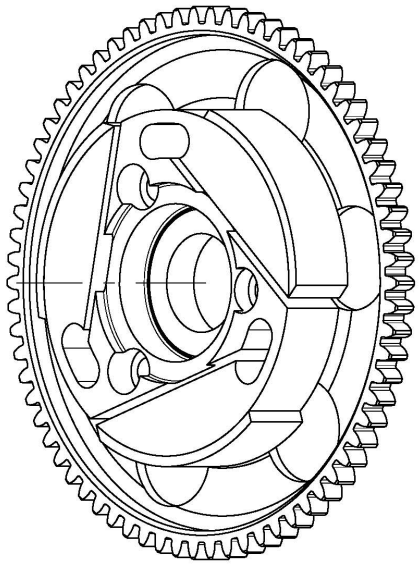

Min. weight 680 g
Poids min. 680 g

SENIOR EXHAUST FITTING

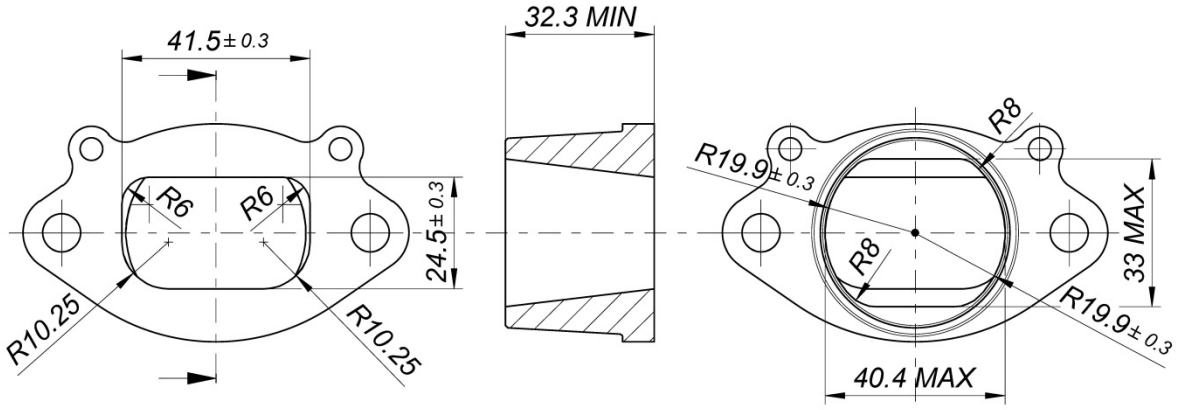

SENIOR EXHAUST MUFFLER VIEW AND DIMENSIONS

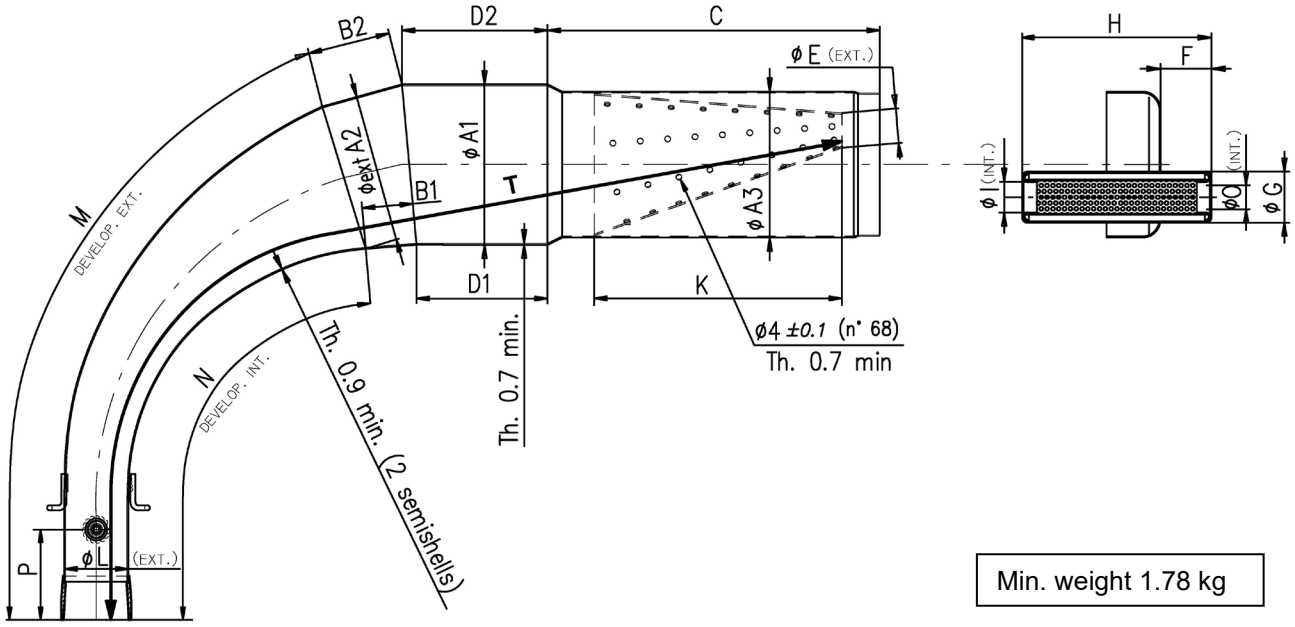

Min. weight 1.78 kg

A1: 110 ±1.5	**B1:** 59 ±3	**D1:** 89.5 ±3	**F:** 36 ±2	**I:** 21 ±1	**M:** 435 ±3	**P:** 50 ±10
A2: 102 ±1.5	**B2:** 59 ±3	**D2:** 109 ±3	**G:** 35 ±1	**K:** 170 ±3	**N:** 340 ±3	**T:** 690 ±5
A3: 100 ±1.5	**C:** 219 ±3	**E:** 23 ±2	**H:** 132 ±2	**L:** 42.5 ±1.5	**O:** 21 ±1	

SENIOR MUFFLER INSTALLATION

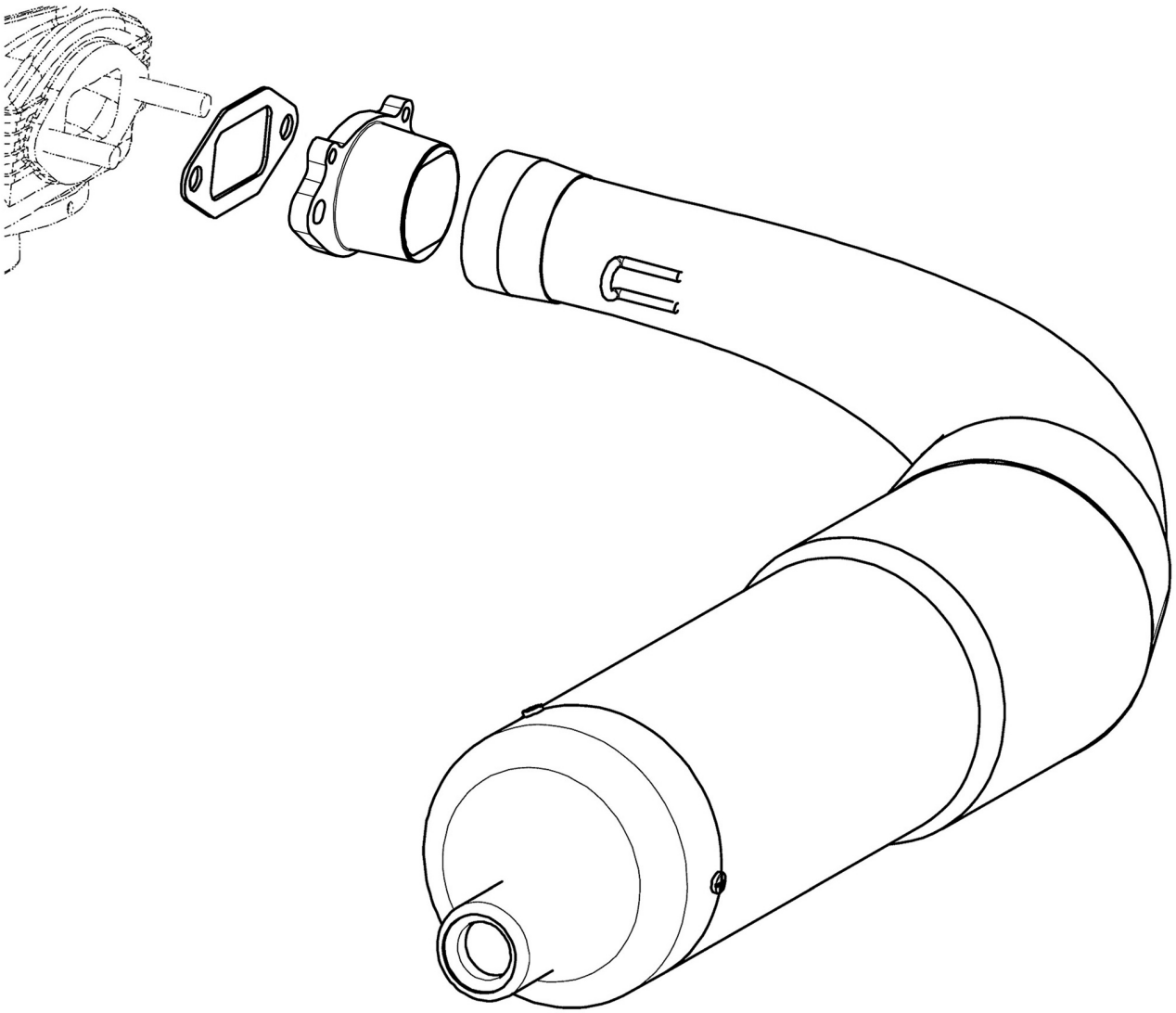

JUNIOR EXHAUST FITTING

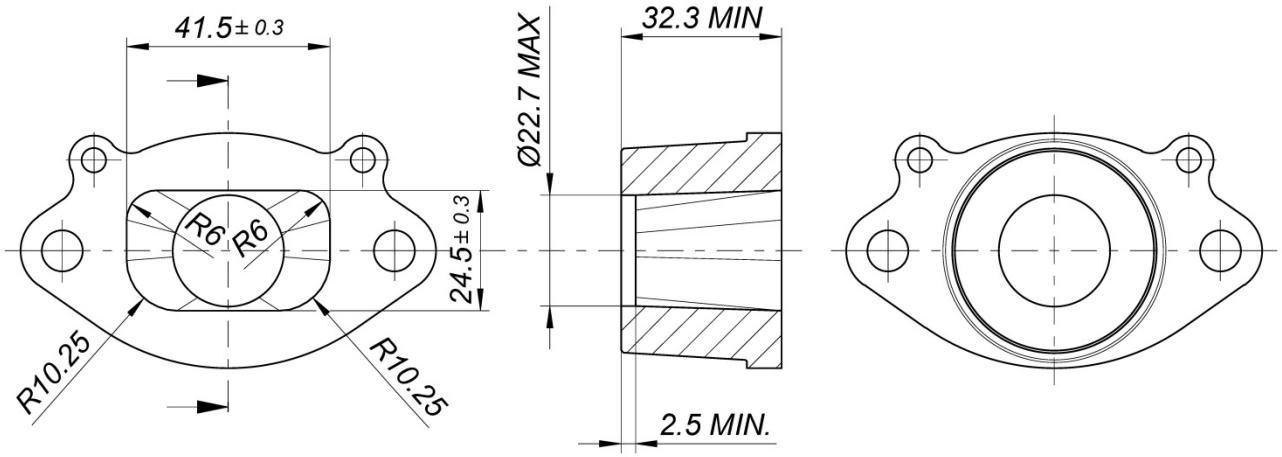

JUNIOR MUFFLER INSTALLATION

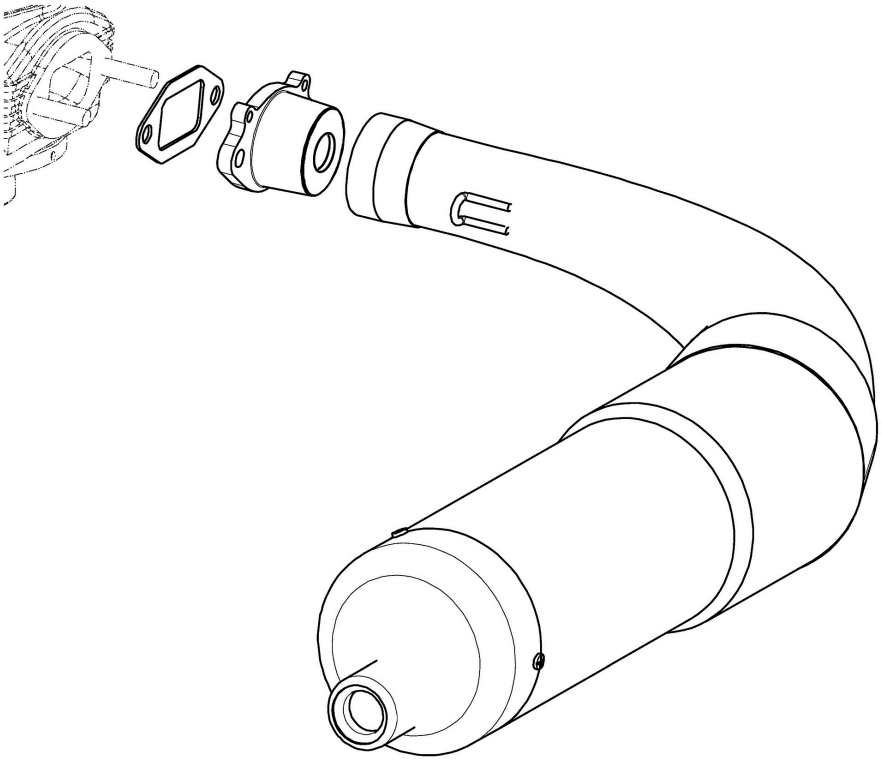

WIRING DIAGRAM (SELETTRA DIGITAL ‘’K’’ IGNITION)

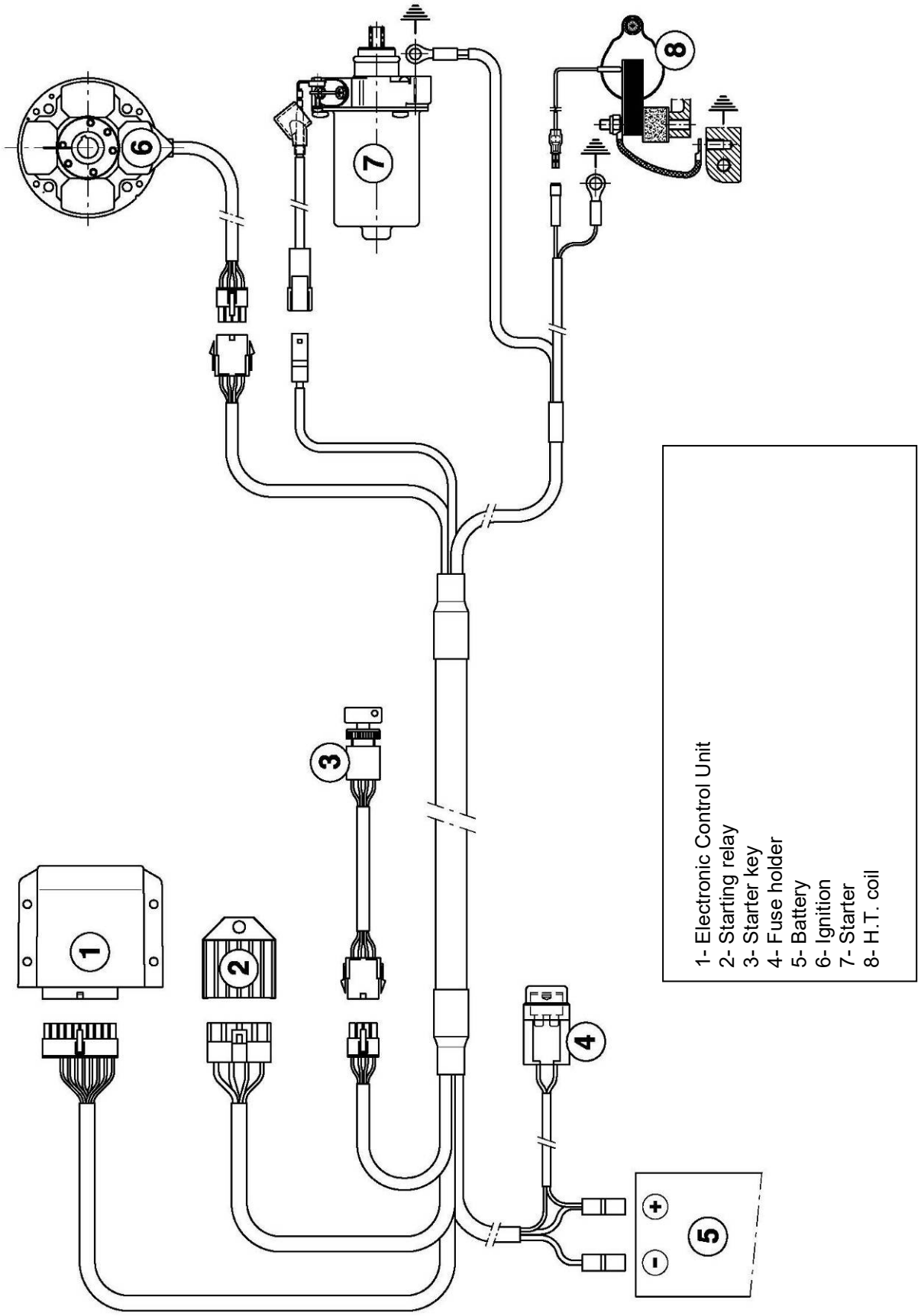

SCHEME FOR ADVANCE CONTROL SELETTRA DIGITAL ''K'' IGNITION

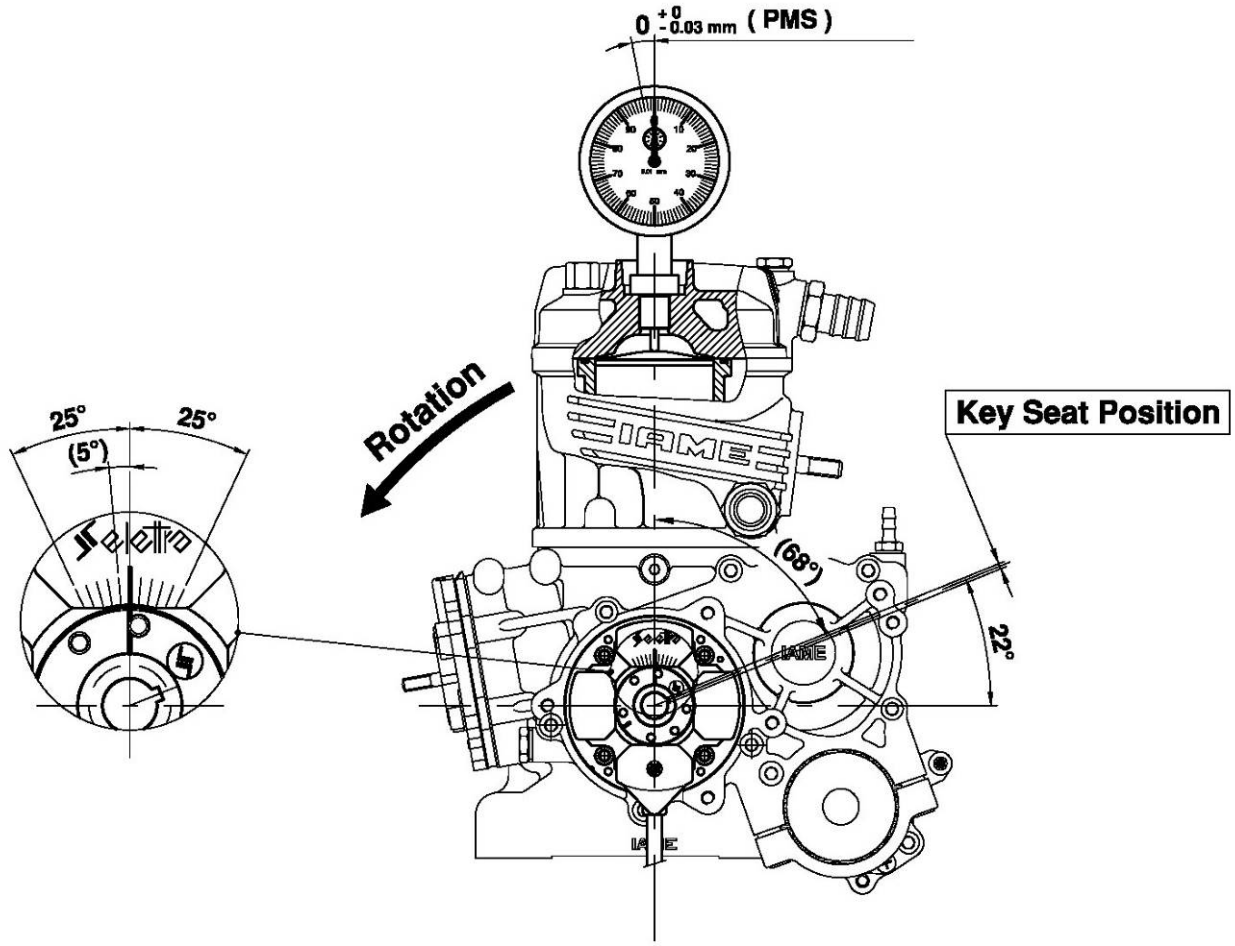

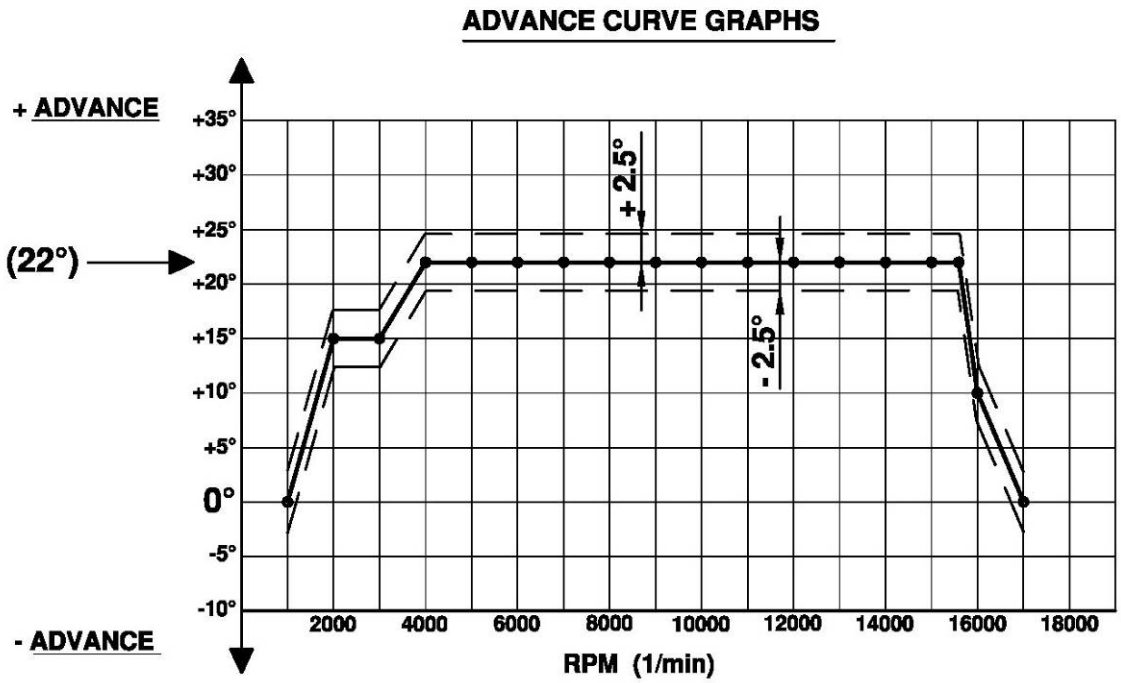

ELECTRONIC BOX MARKING	
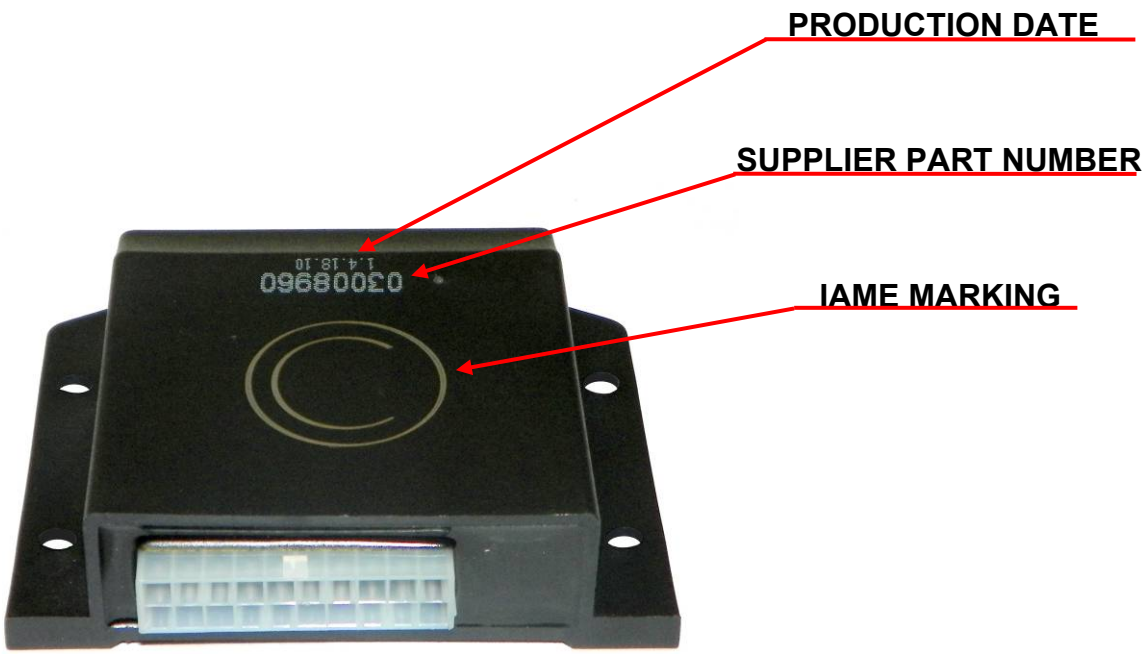	
H.T. COIL IDENTIFICATION MARKING	STATOR IDENTIFICATION MARKING
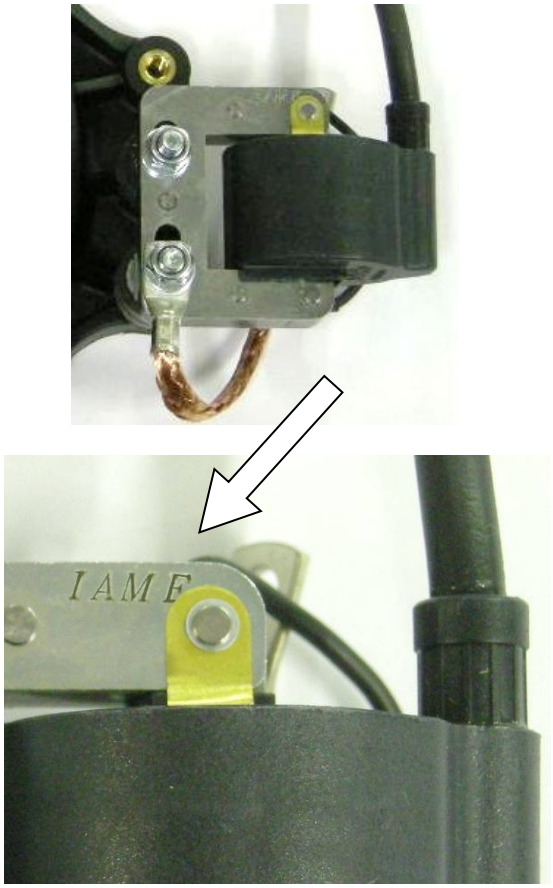	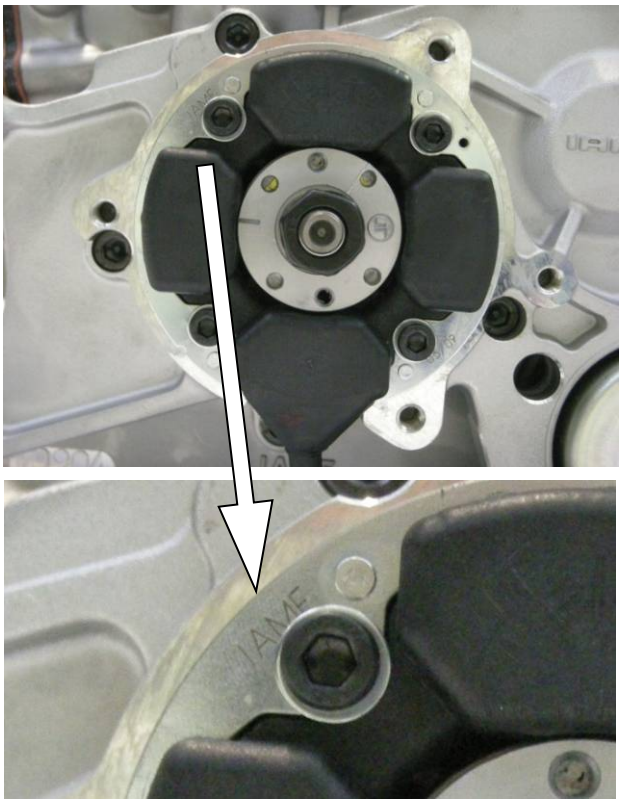

WIRING DIAGRAM (SELETTRA DIGITAL ‘‘K’’ IGNITION 2013)

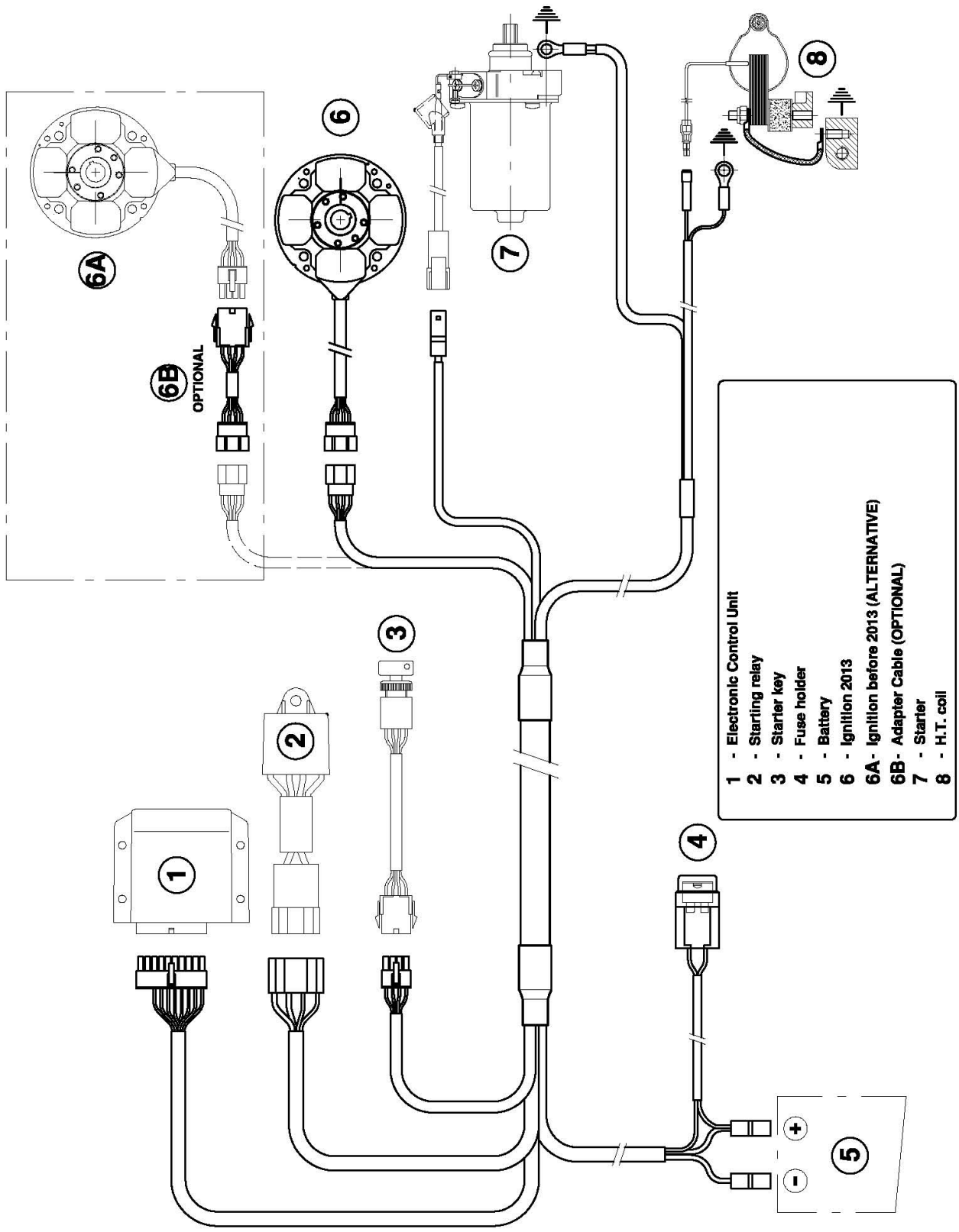

INGNITION STATOR FASTENING COMPONENTS MAIN DIMENSIONS

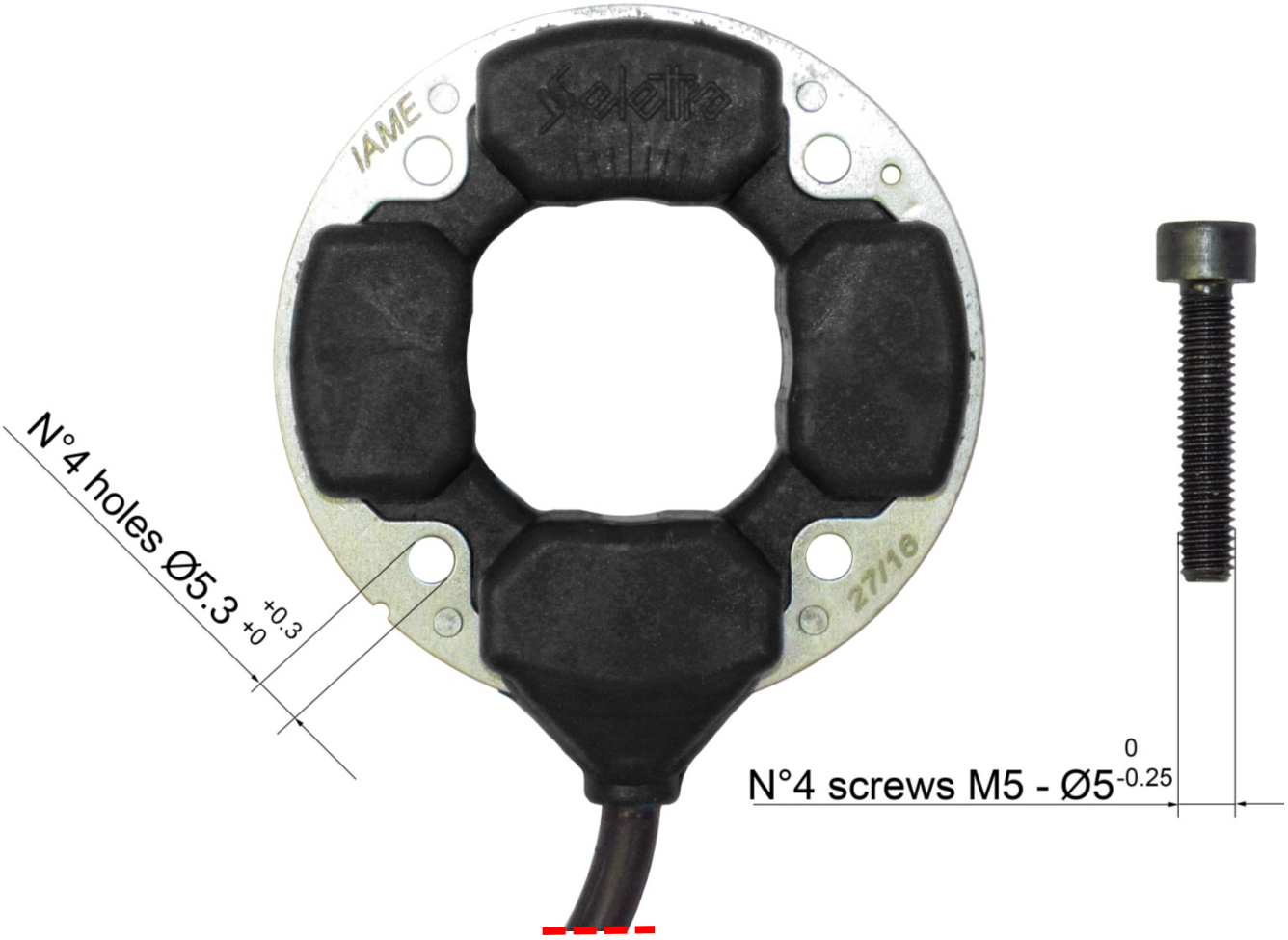

ALTERNATIVE WIRING LOOM DIAGRAM - SELETTRA DIGITAL “S”

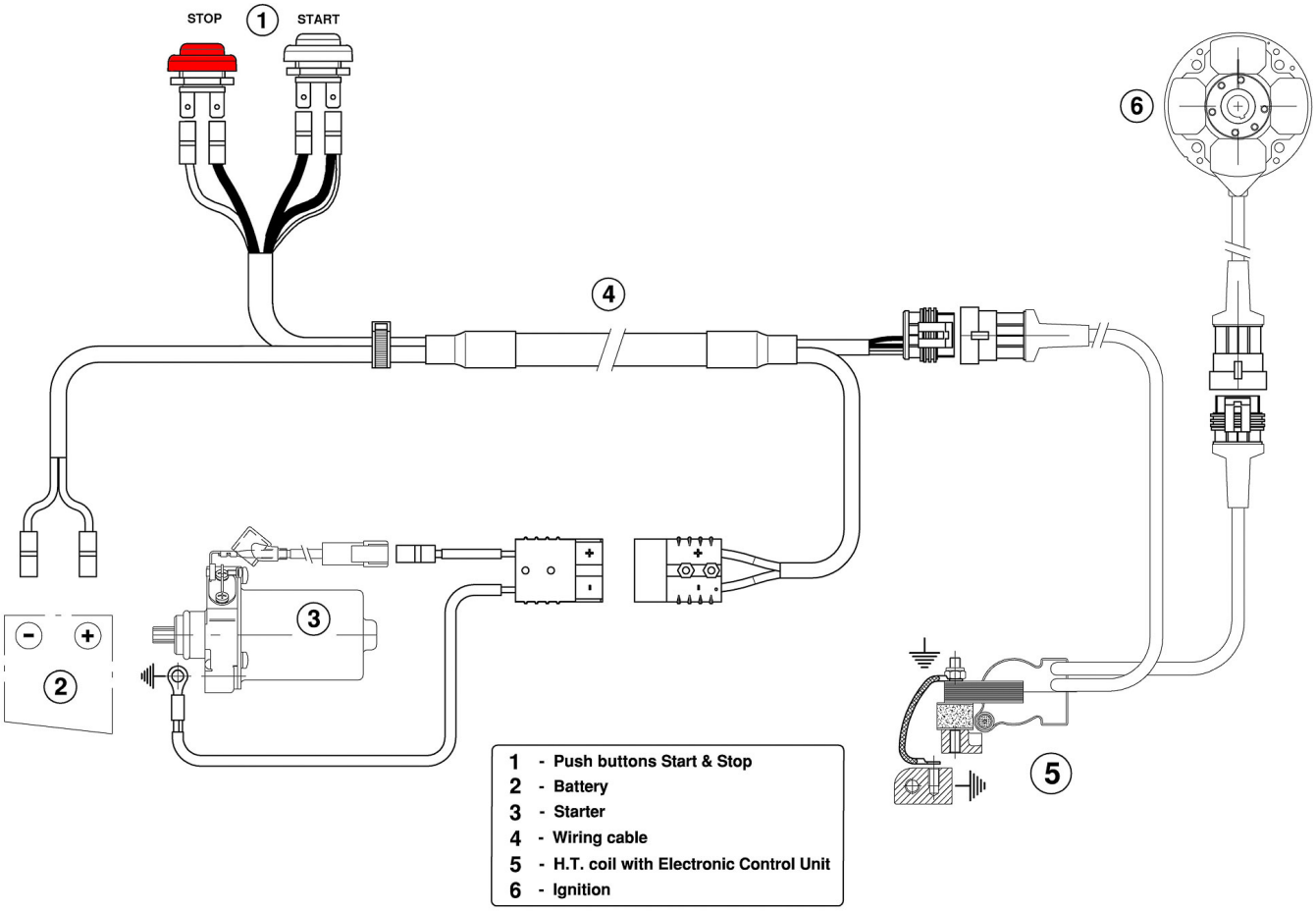

ALTERNATIVE WIRING LOOM - SELETTRA DIGITAL “S”

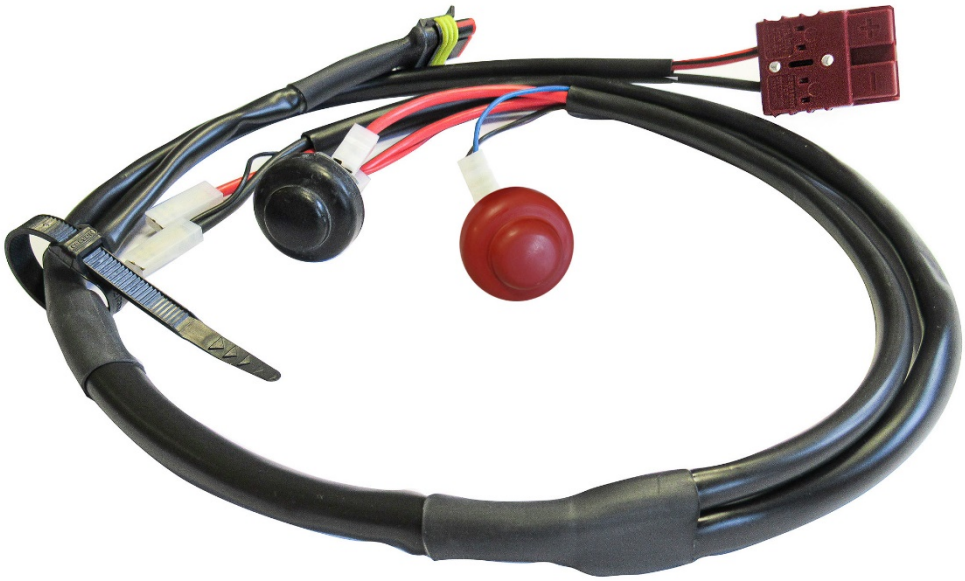

ALTERNATIVE INGNITION COMPONENTS AND STATOR FASTENING
SELETTRA DIGITAL “S”

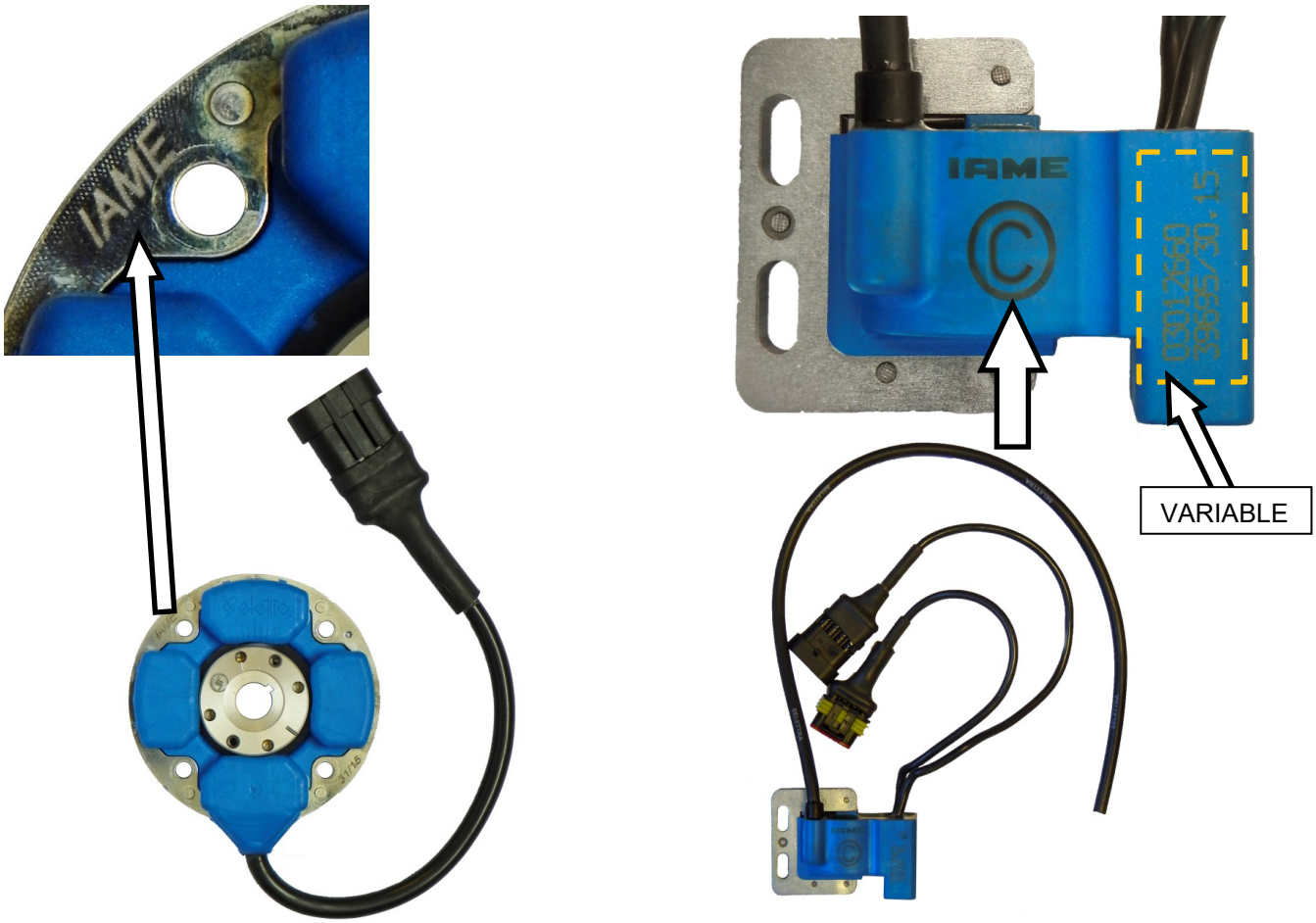

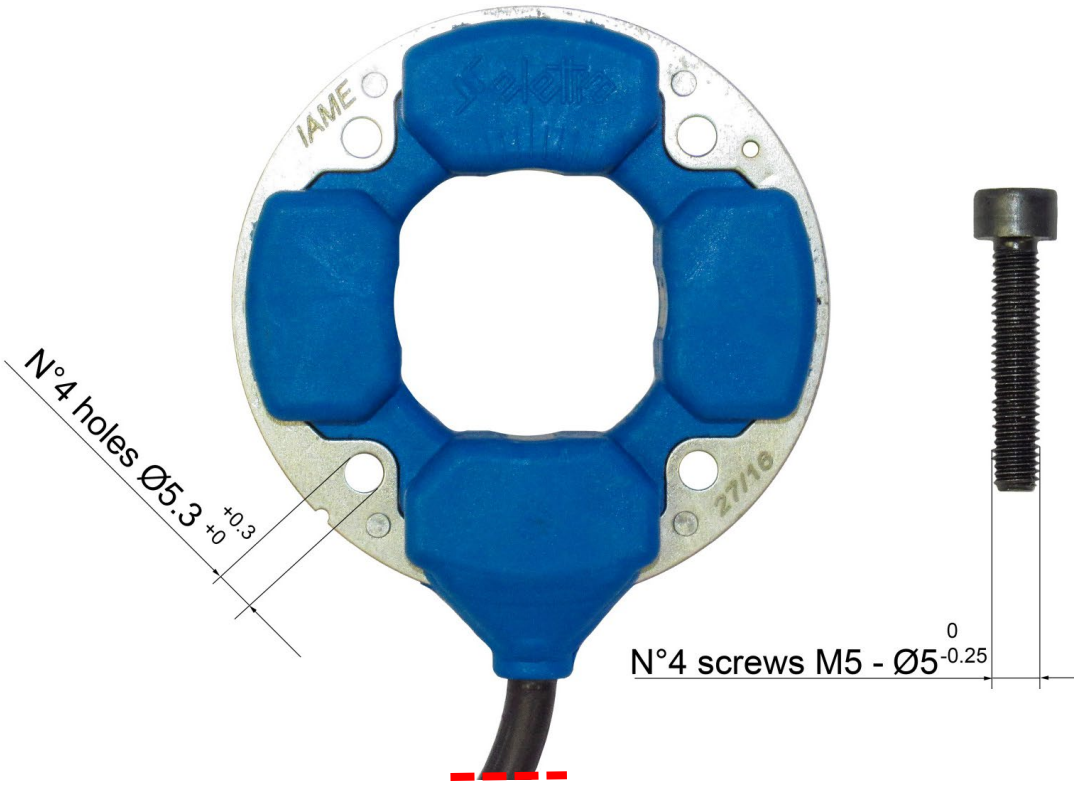

SCHEME FOR ADVANCE CONTROL SELETTRA DIGITAL “S”

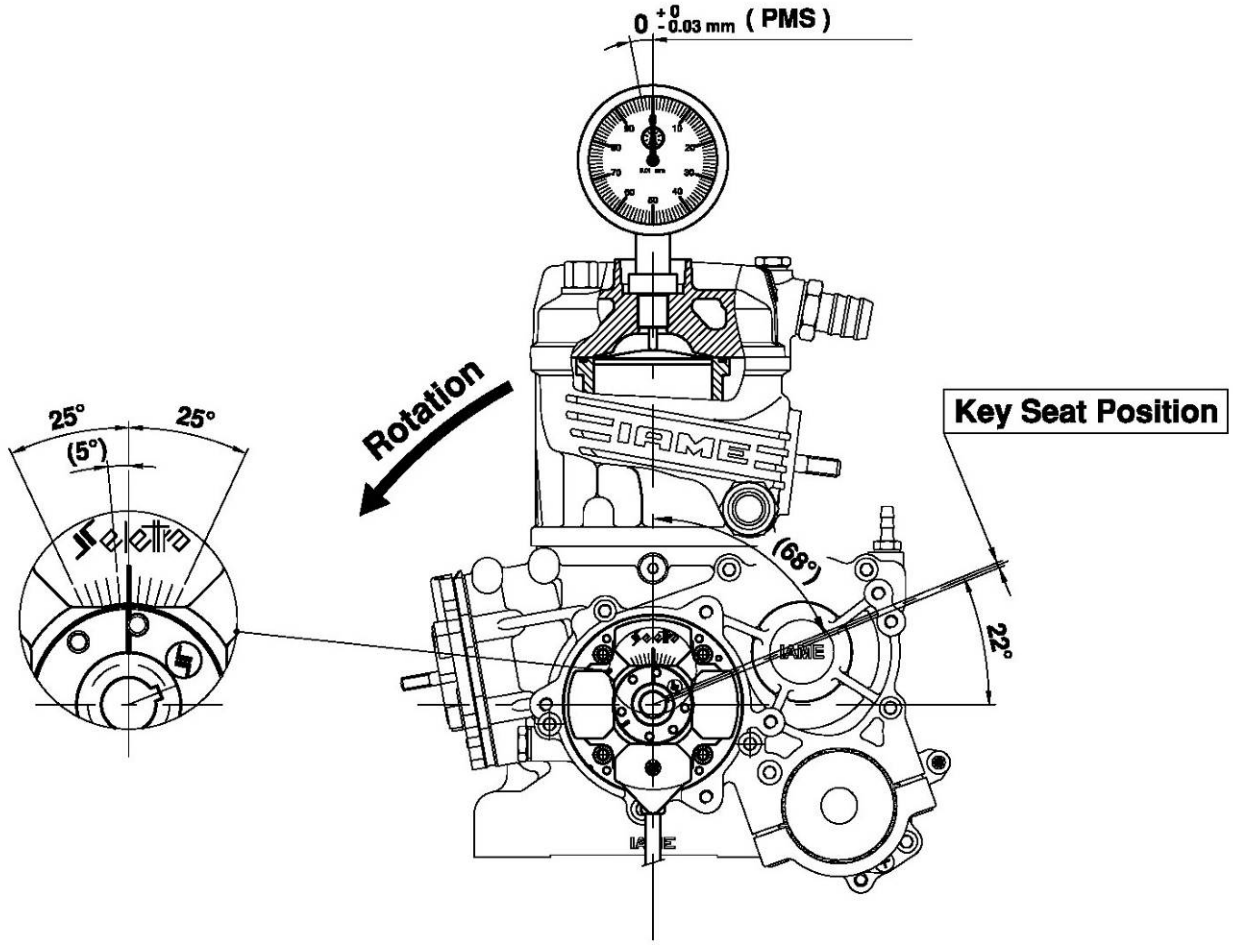

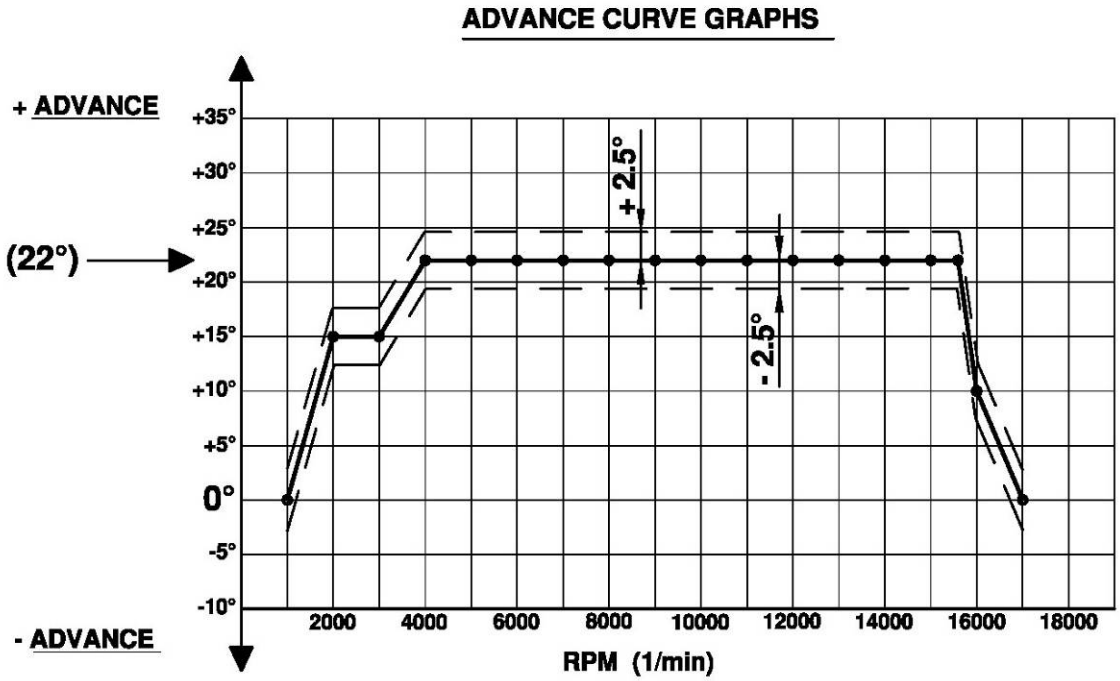

BALANCER SHAFT GEAR TIMING SCHEME

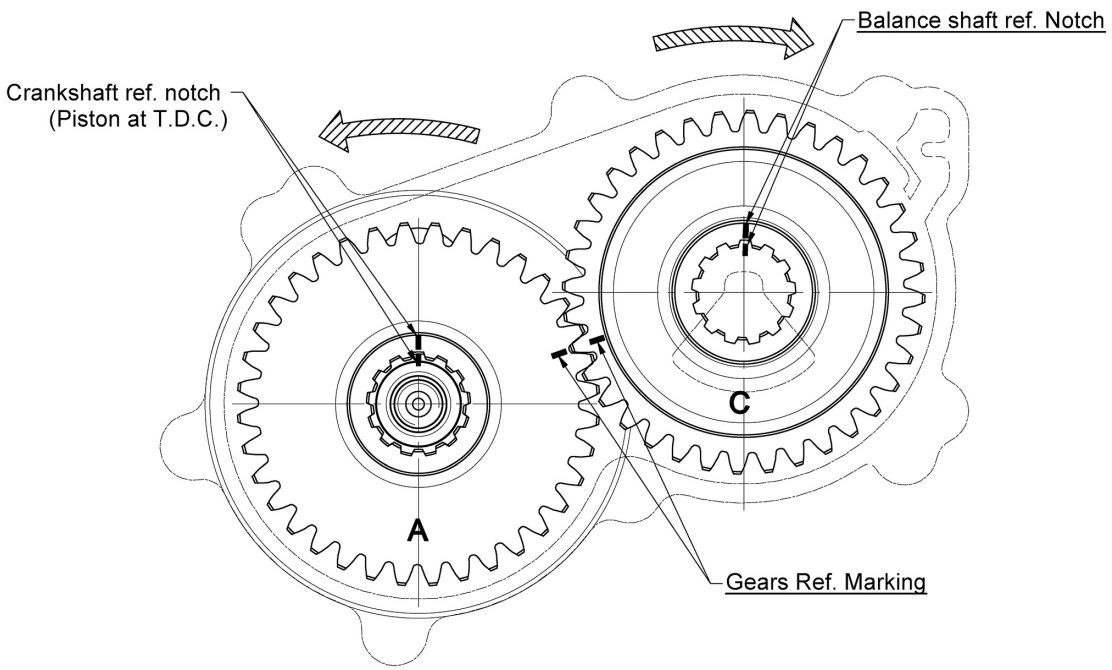

GEAR ALTERNATIVE FIXING

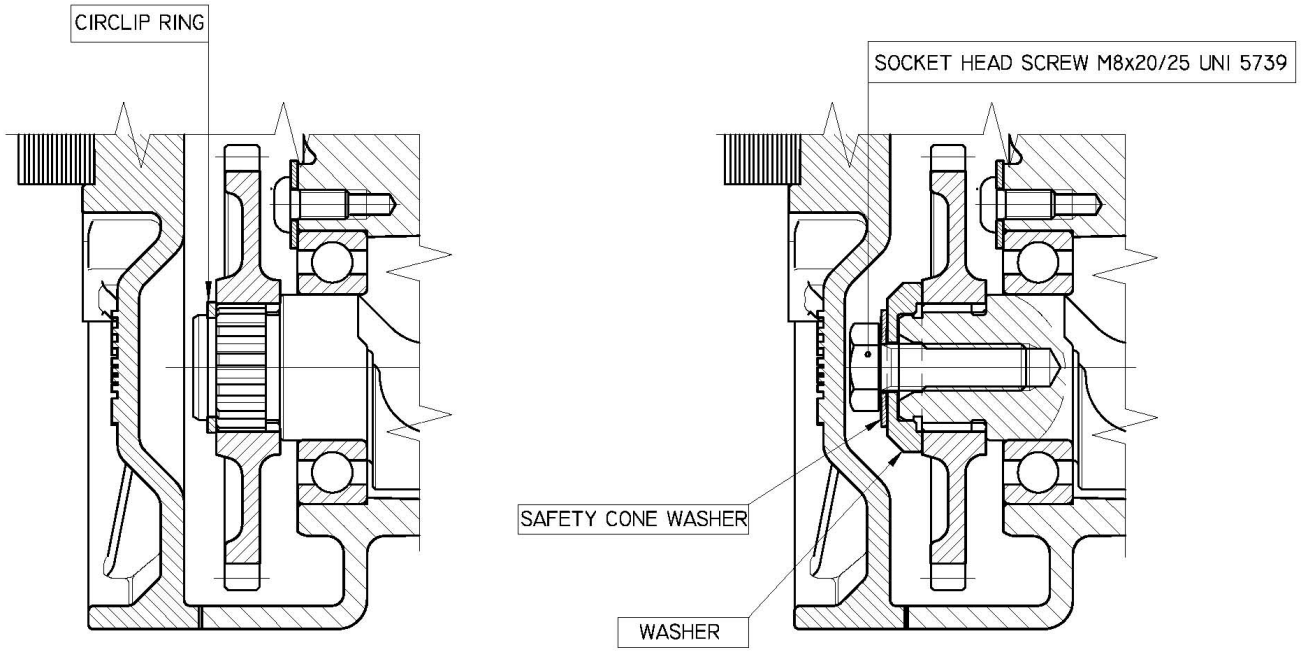

RADIATOR DESCRIPTION AND SKETCH OF PARTS

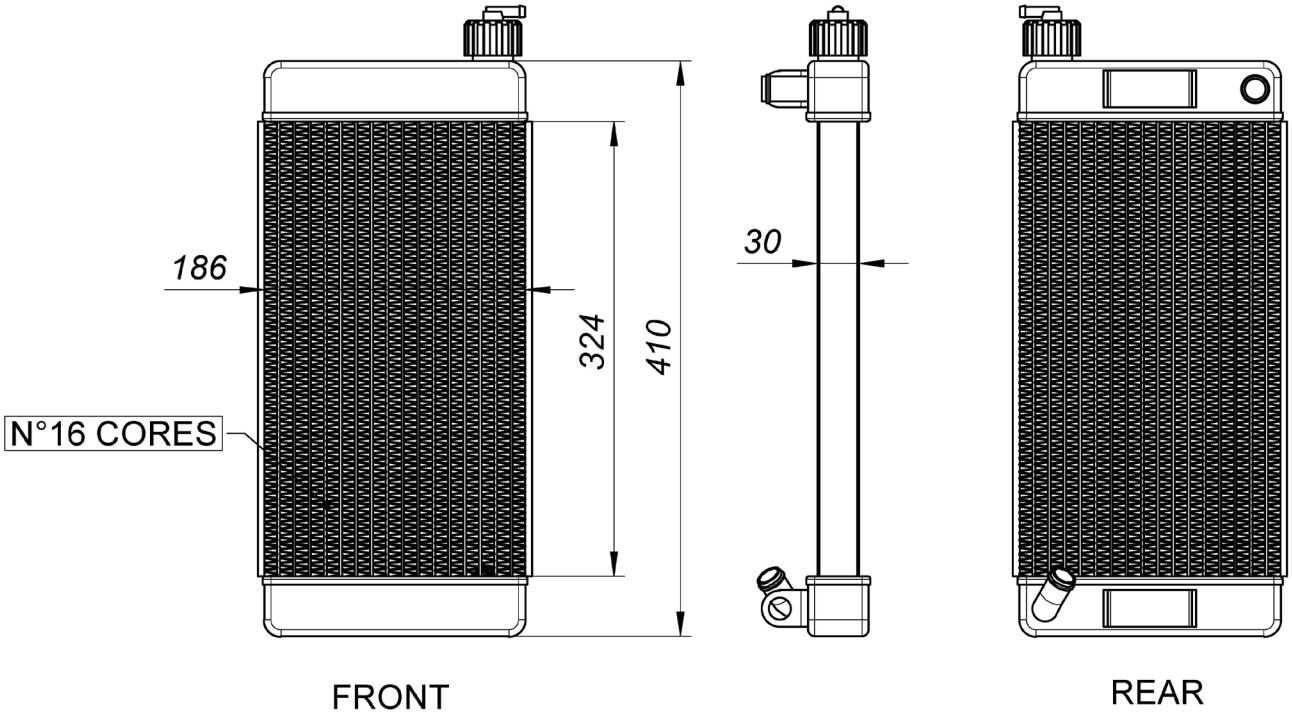

PAINTED AND NOT PAINTED

FRONT **REAR**

RADIATOR ALTERNATIVE DESCRIPTION AND SKETCH

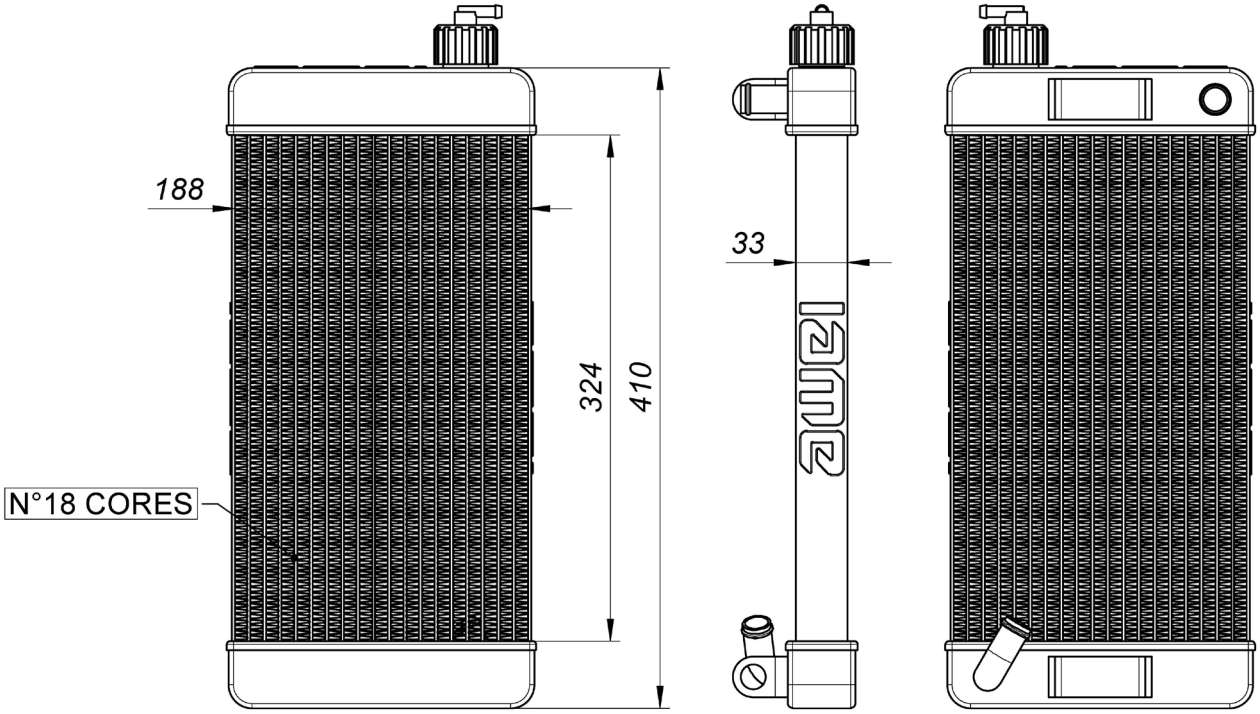

FRONT **REAR**

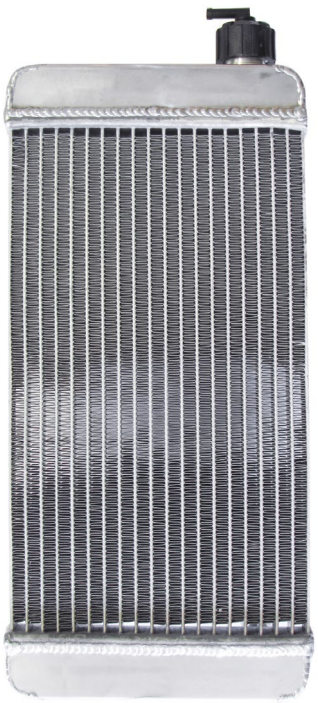

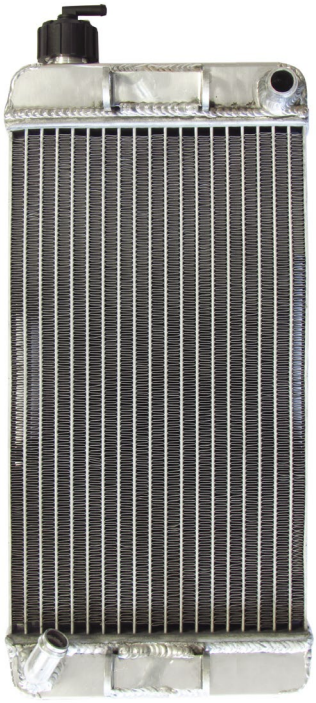

FRONT **REAR**

RADIATOR ALTERNATIVE SKETCH AND PHOTOS IDENTIFICATION COMPONENTS

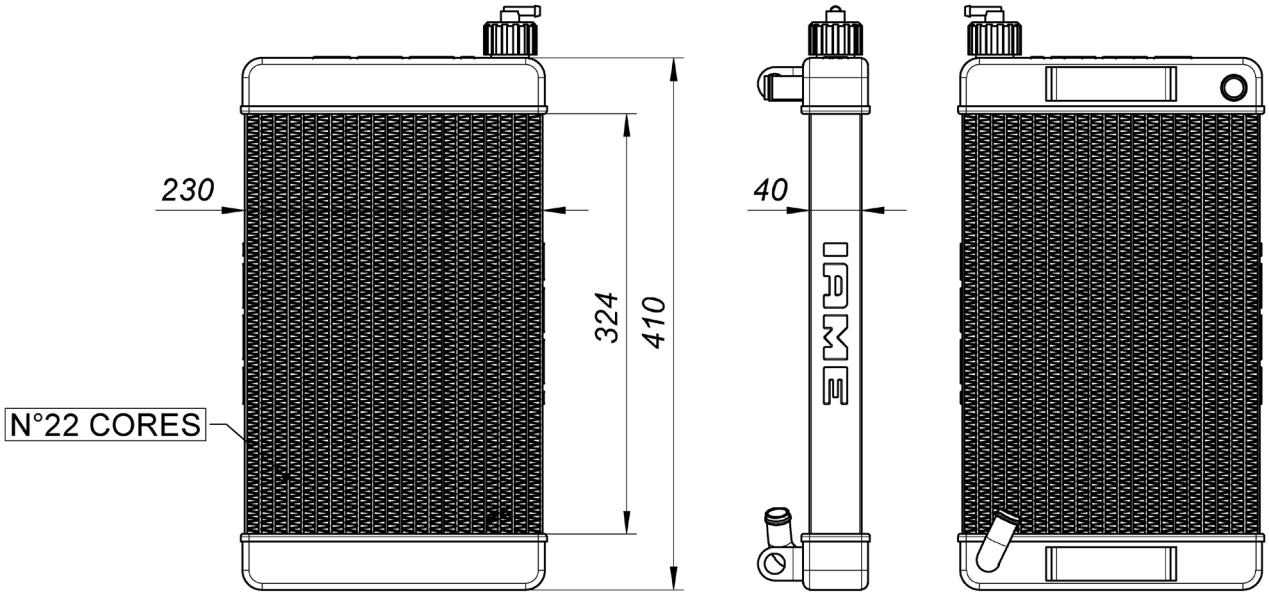

FRONT

REAR

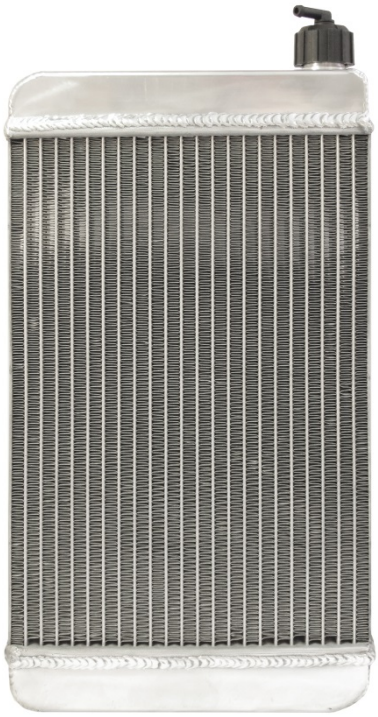

FRONT

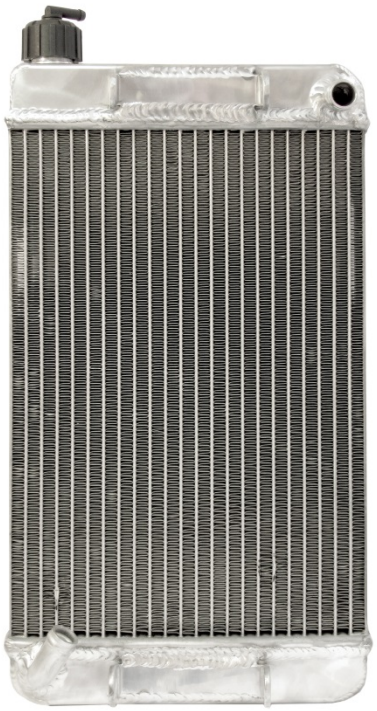

REAR

RADIATOR AND ITS SUPPORTS

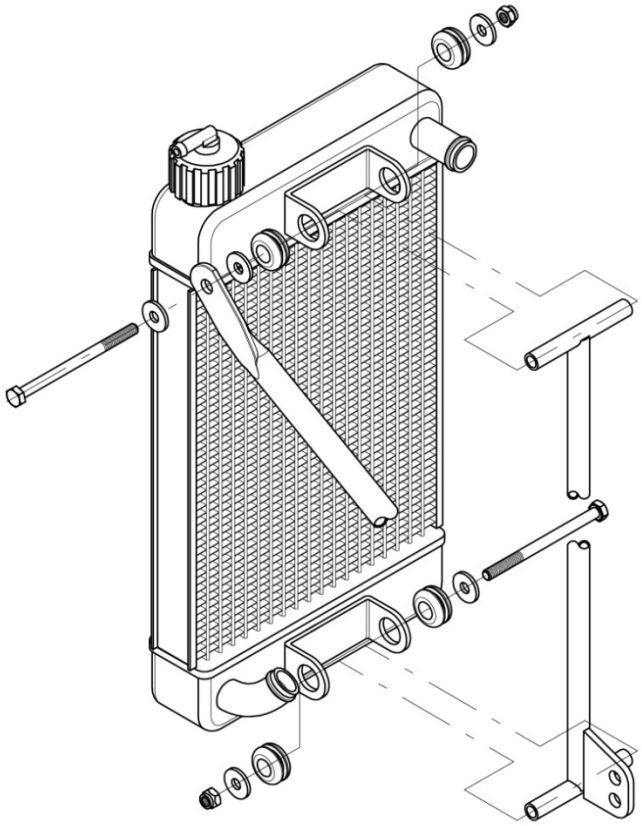

WATER PUMP GROUP

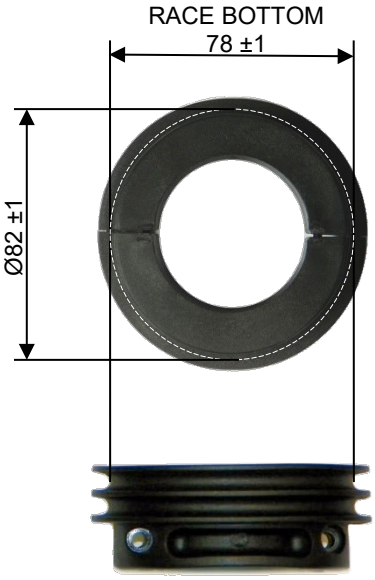

RACE BOTTOM
Ø19 ±1

THERMOSTAT

ALTERNATIVE

ALTERNATIVE WATER PUMP & PULLEY

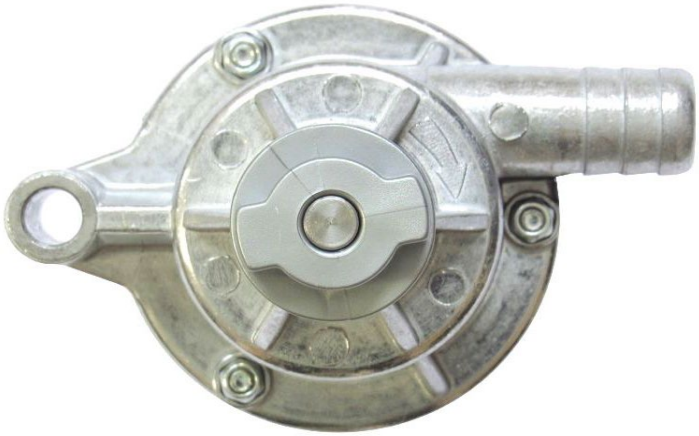

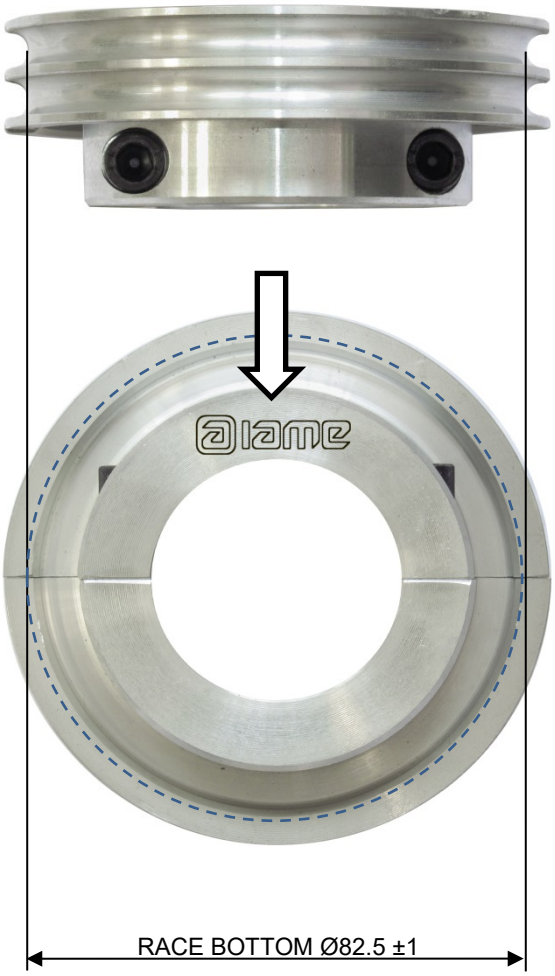

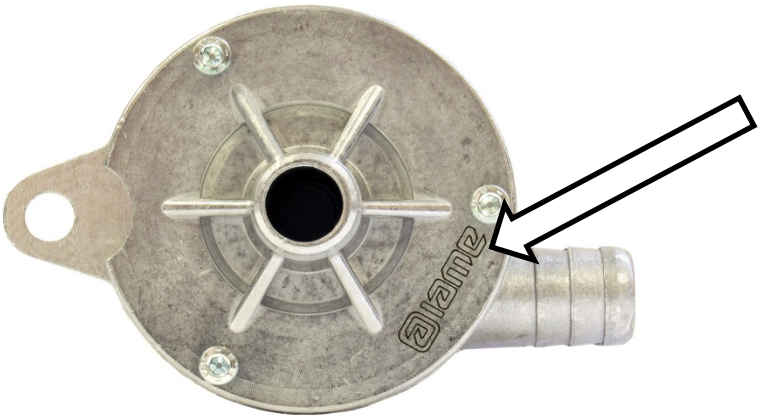

ALTERNATIVE RADIATOR SUPPORT

PISTON IDENTIFICATION MARKING

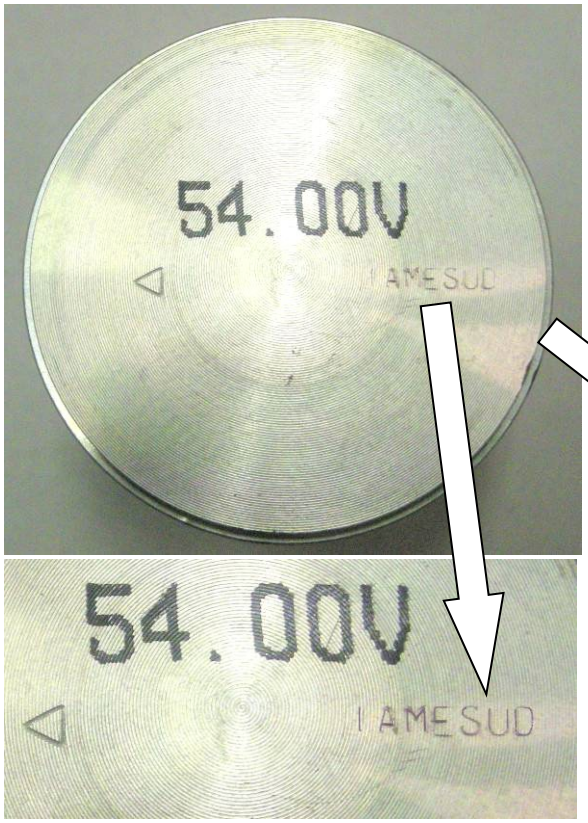

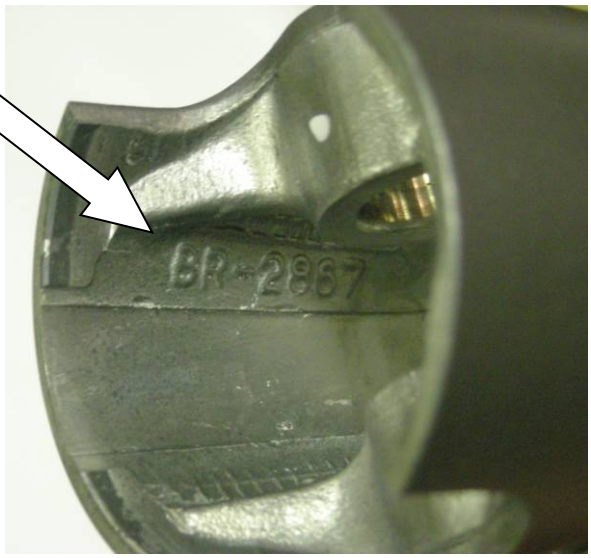

PHOTO IDENTIFICATION CONROD

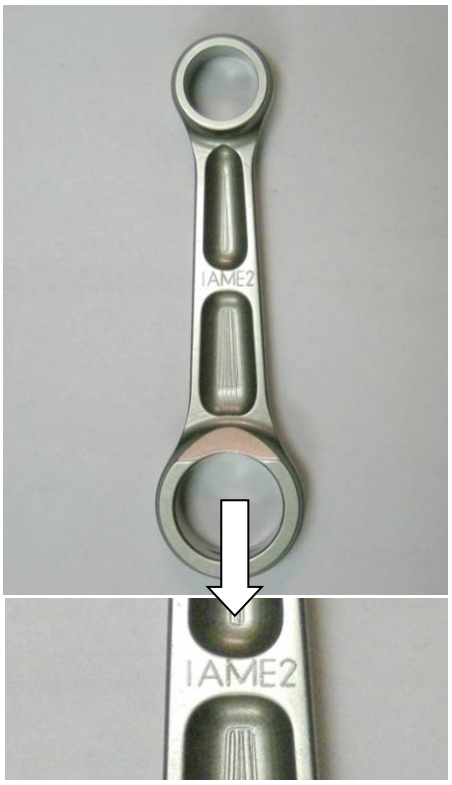

IDENTIFICATION BALANCING SHAFT MARKING

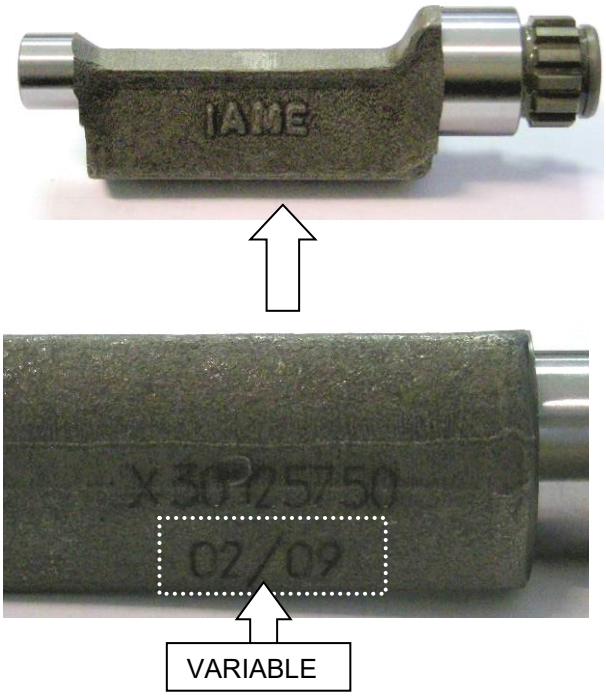

CRANKSHAFT IDENTIFICATION MARKING

GEAR COMMAND BALANCING SHAFT IDENTIFICATION MARKING

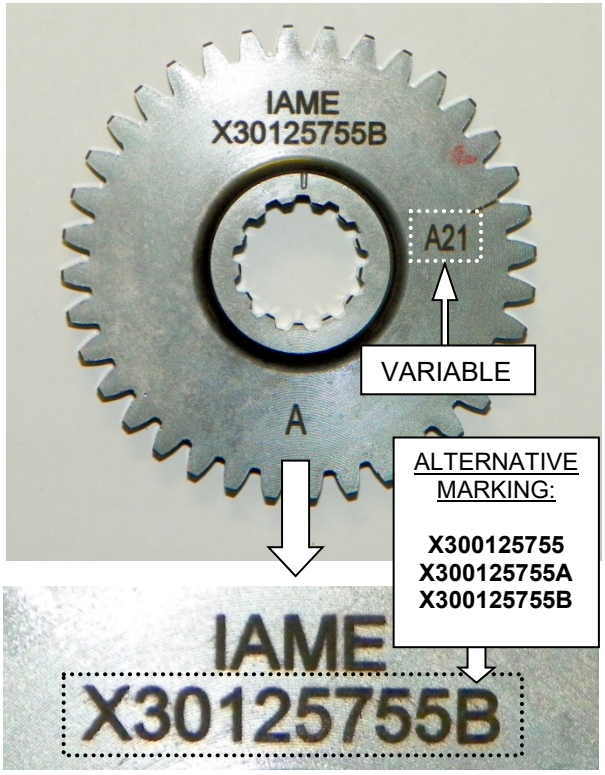

STARTER RING IDENTIFICATION MARKING

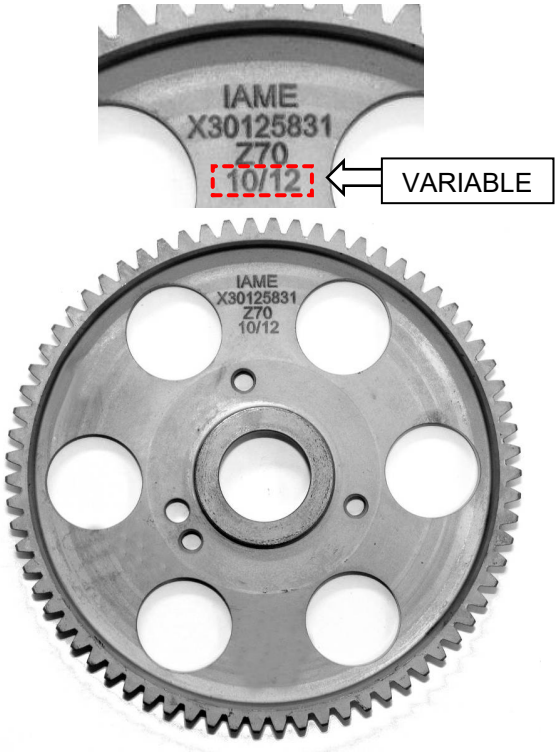

SPROCKET IDENTIFICATION MARKING	CLUTCH DRUM IDENTIFICATION MARKING
CLUTCH BODY IDENTIFICATION MARKING	STARTER IDENTIFICATION MARKING
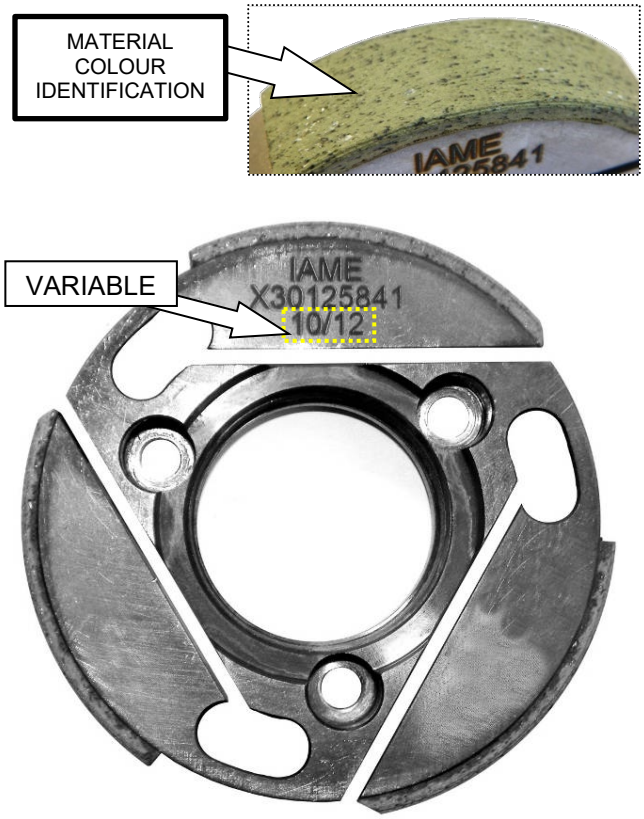	

REED GROUP & PETALS IDENTIFICATION MARKING

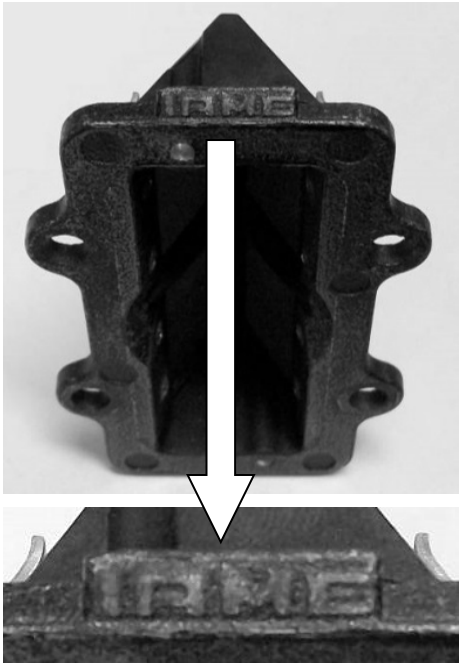

FIBER GLASS

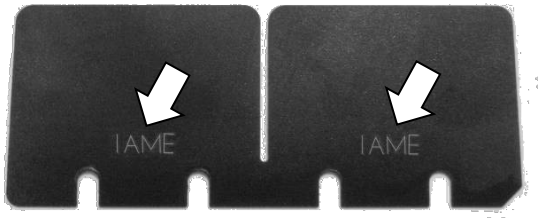

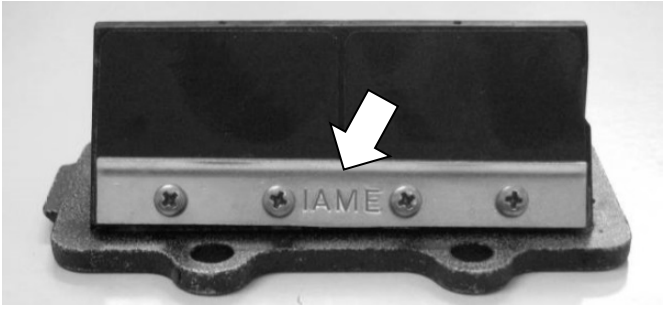

PHOTO IDENTIFICATION CARBURETOR INLET CONVEYOR

EXHAUST SILENCER IDENTIFICATION MARKING

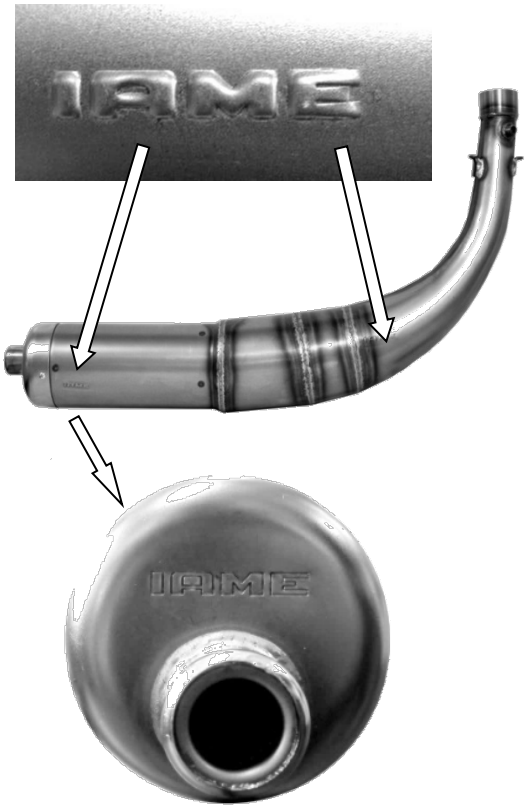

CLUTCH COVER IDENTIFICATION MARKING

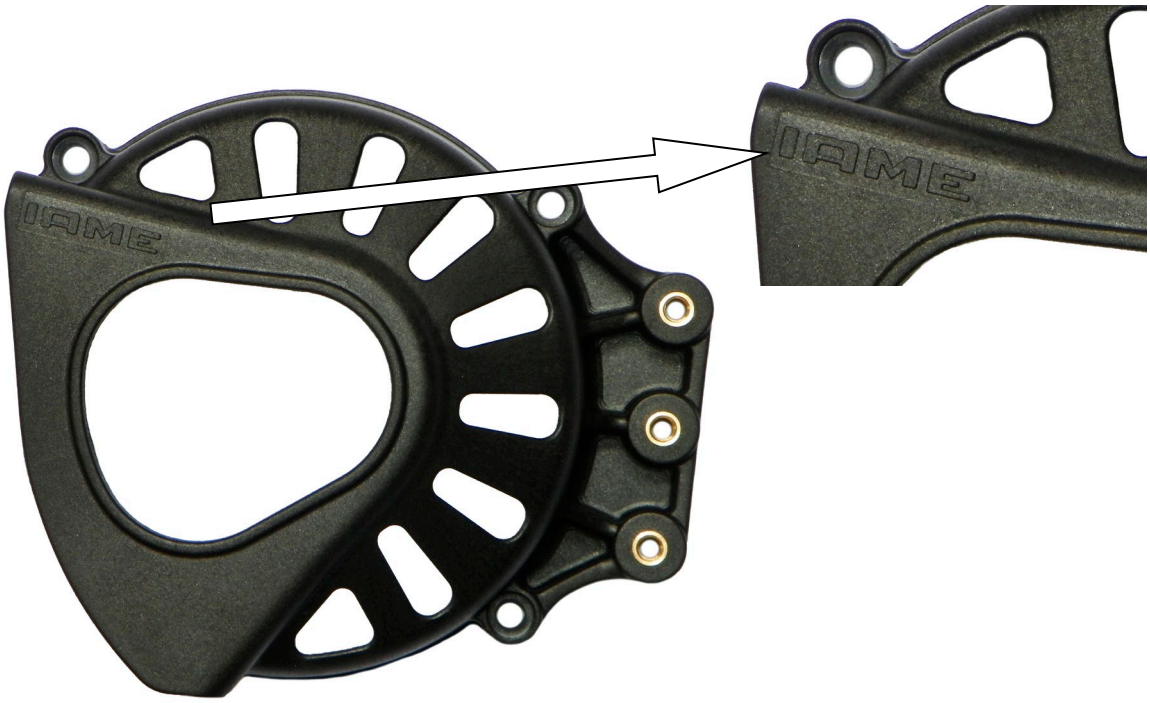

BENDIX COVER IDENTIFICATION MARKING

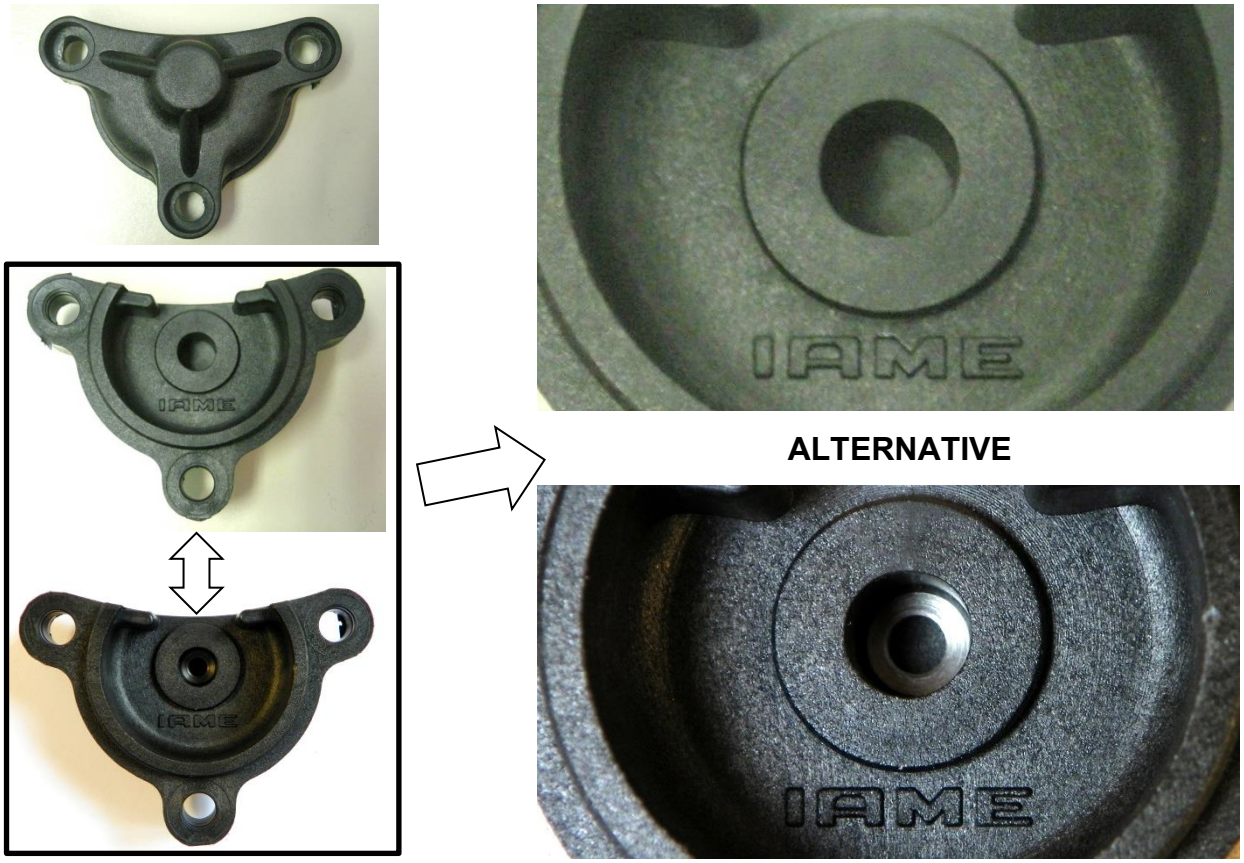

ALTERNATIVE RADIATOR IAME IDENTIFICATION MARKING

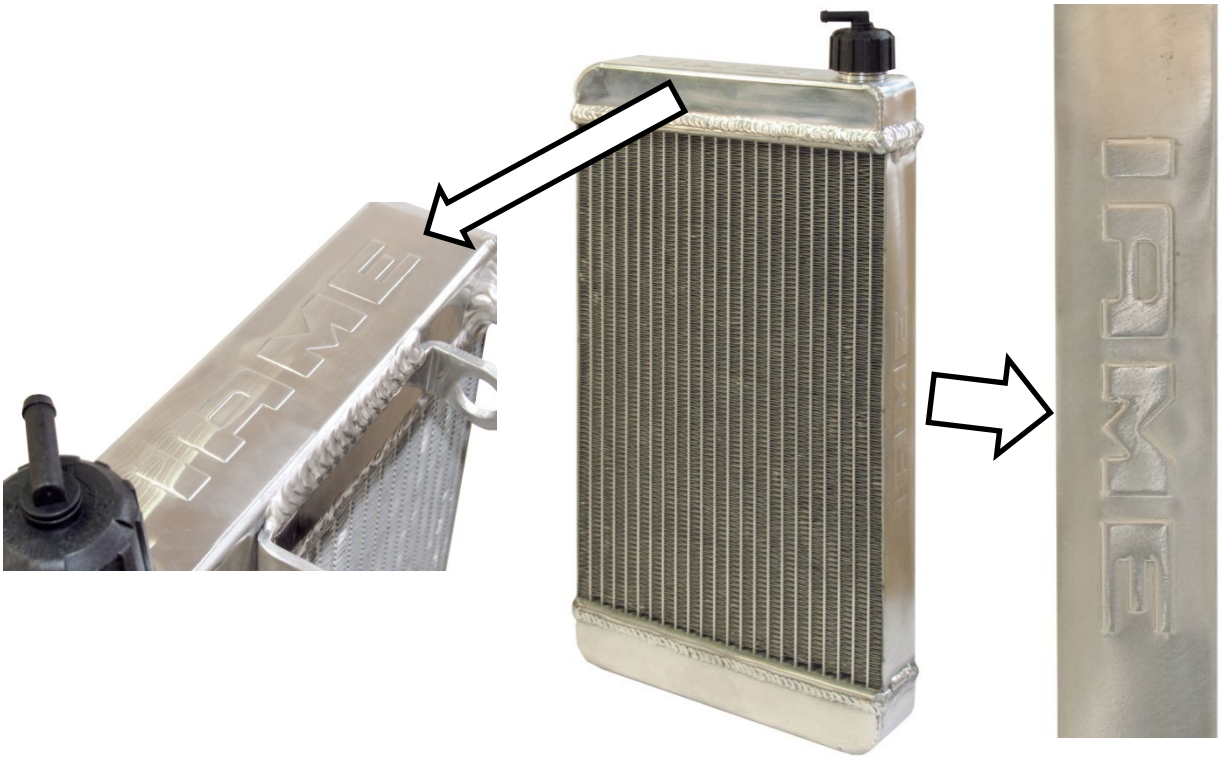

FROM 2014 ON

STICKER APPLICATION AREA

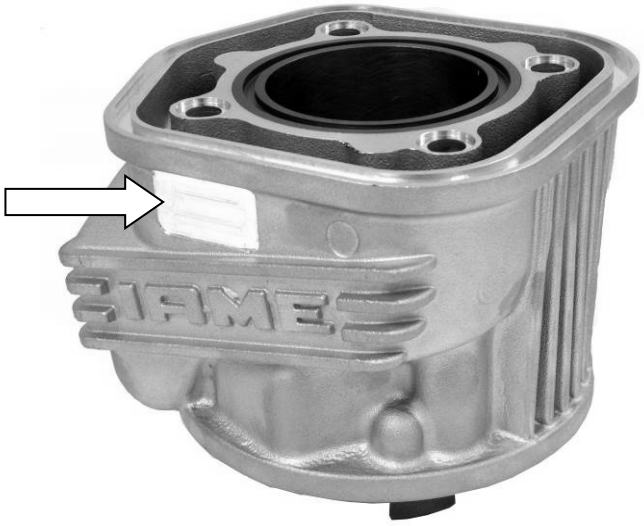

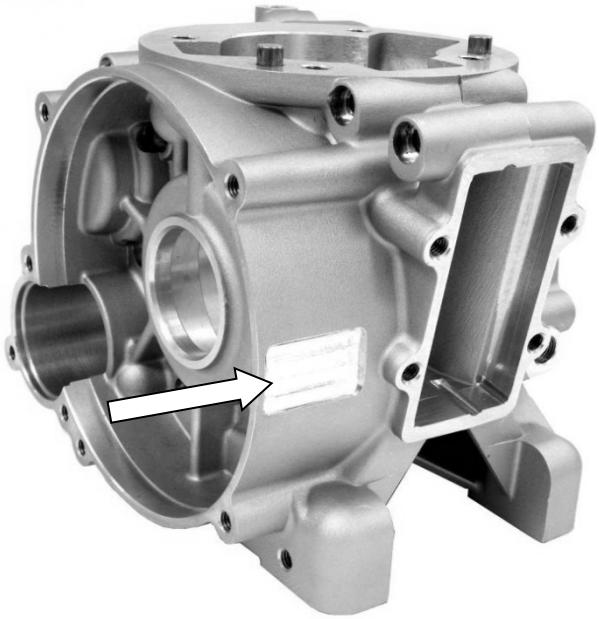

ENGINE STICKER “USA”

ALTERNATIVE AREA

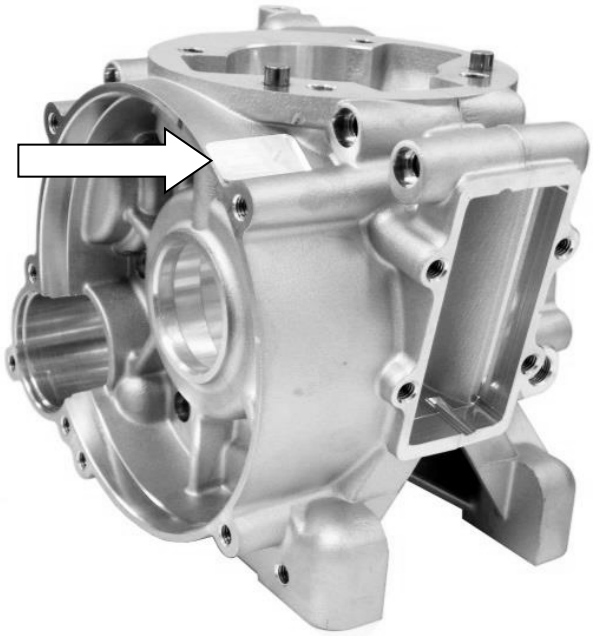

CYLINDER IDENTIFICATION MARKING

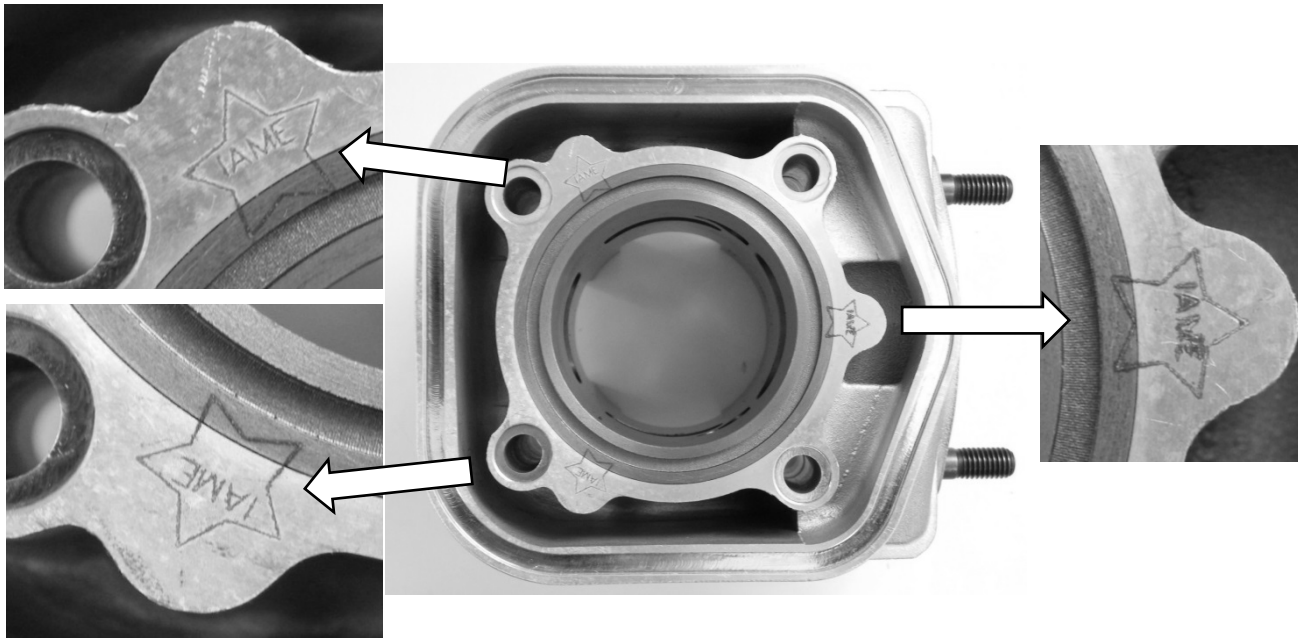

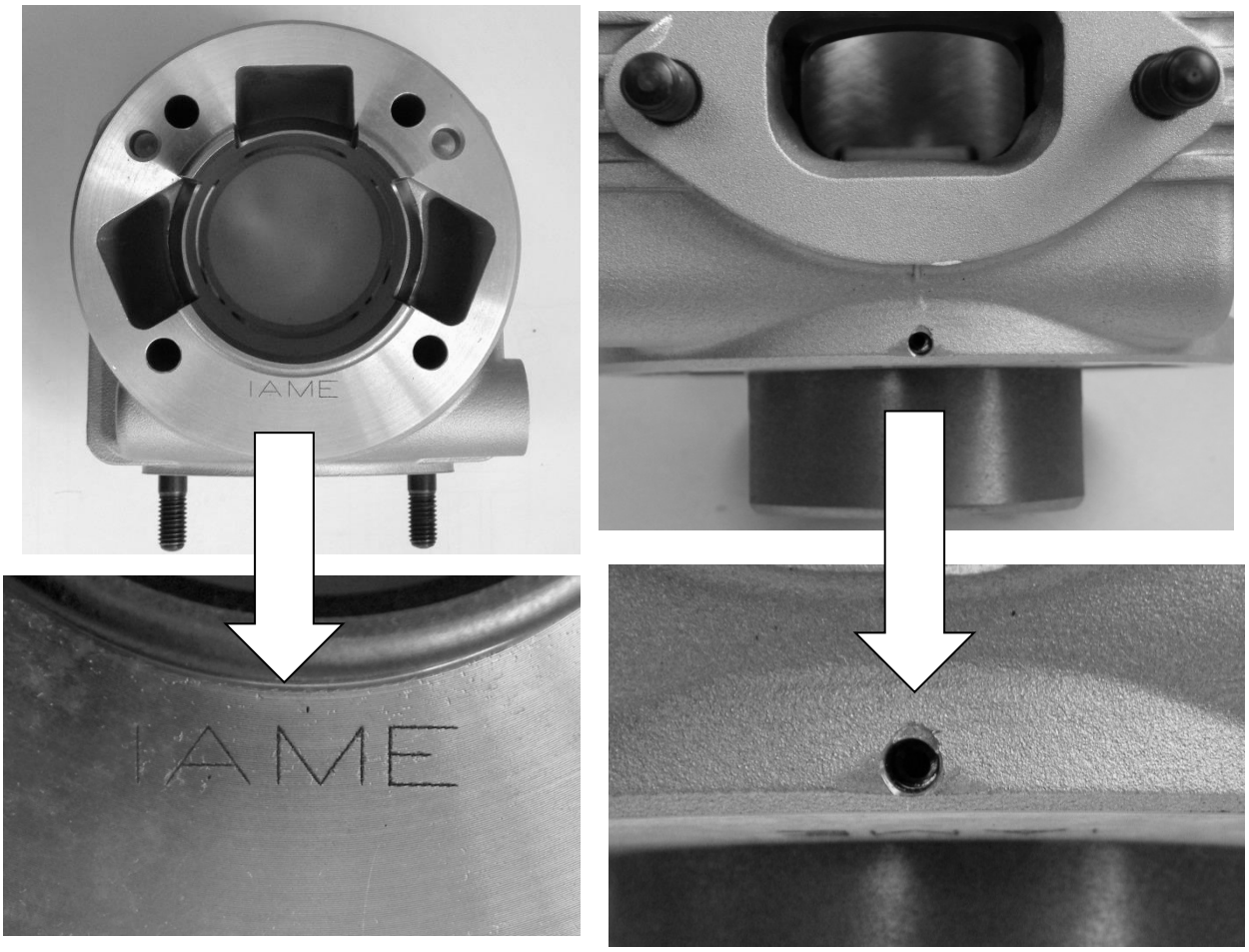

PHOTO IDENTIFICATION CARBURETTOR INLET CONVEYOR

Old version - while stocks last

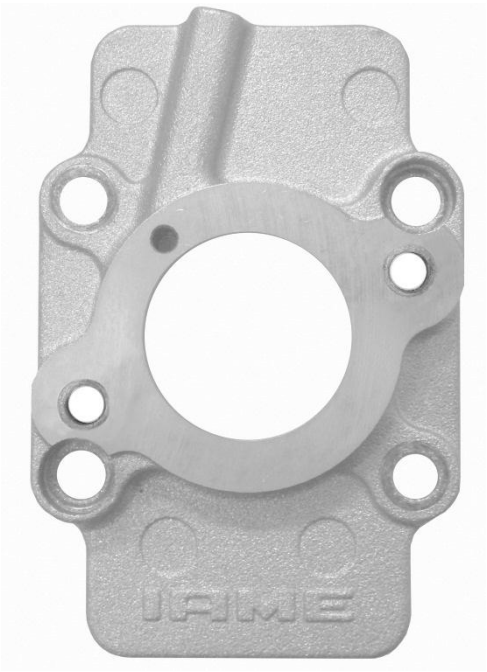

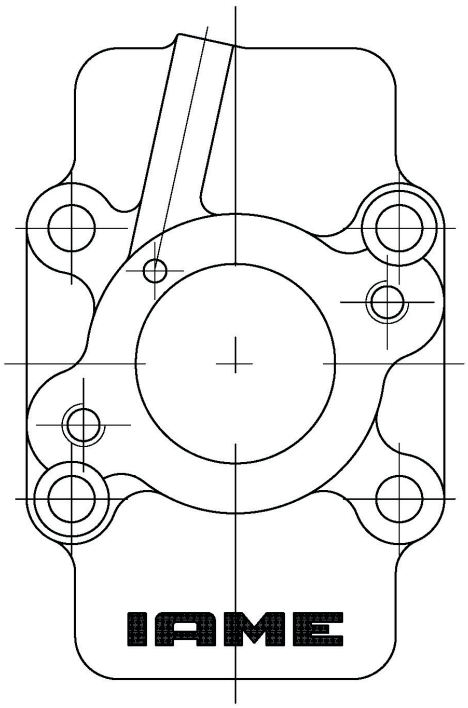

IN ALTERNATIVE

New version

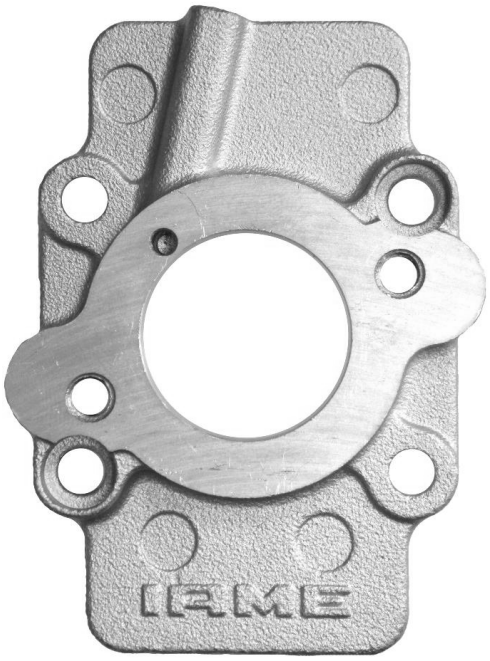

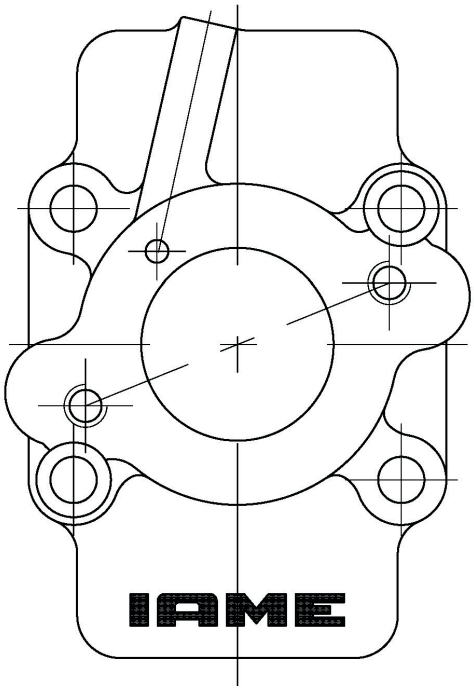

ACTUAL PISTON

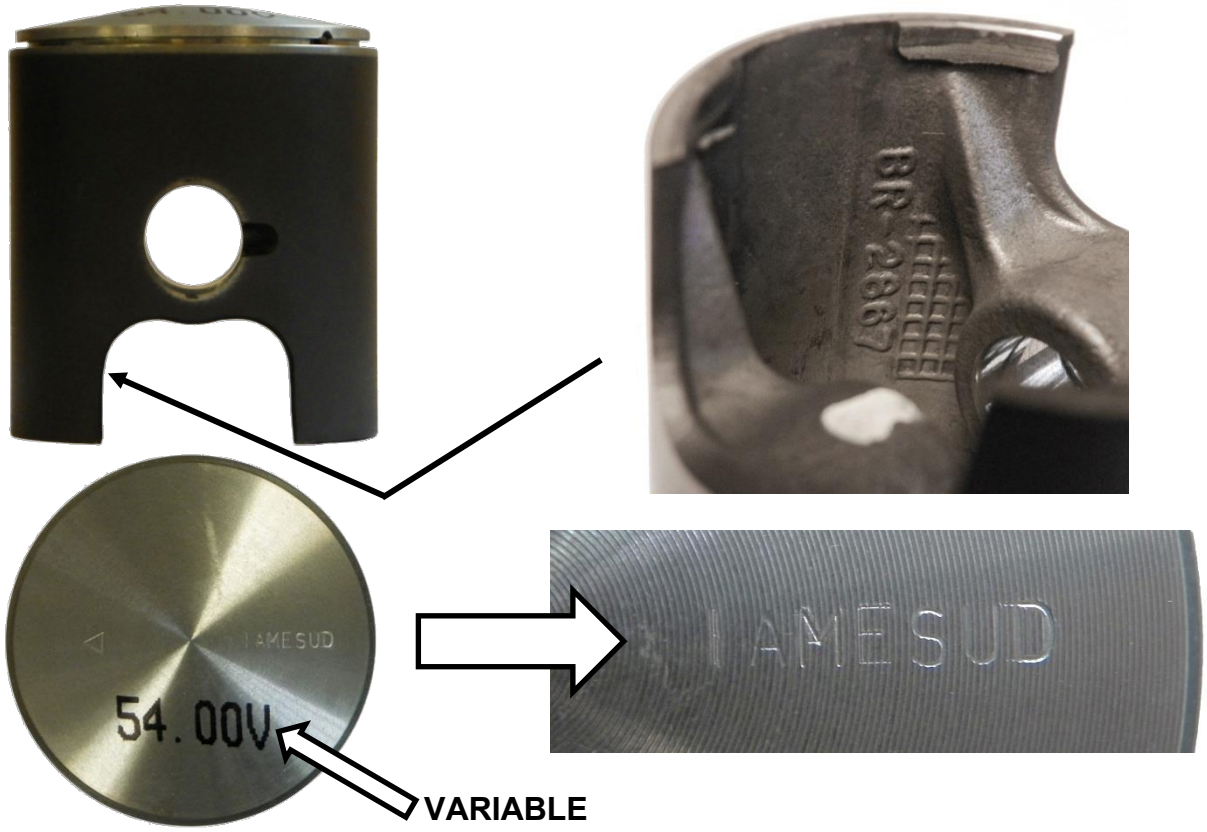

ALTERNATIVE PISTON

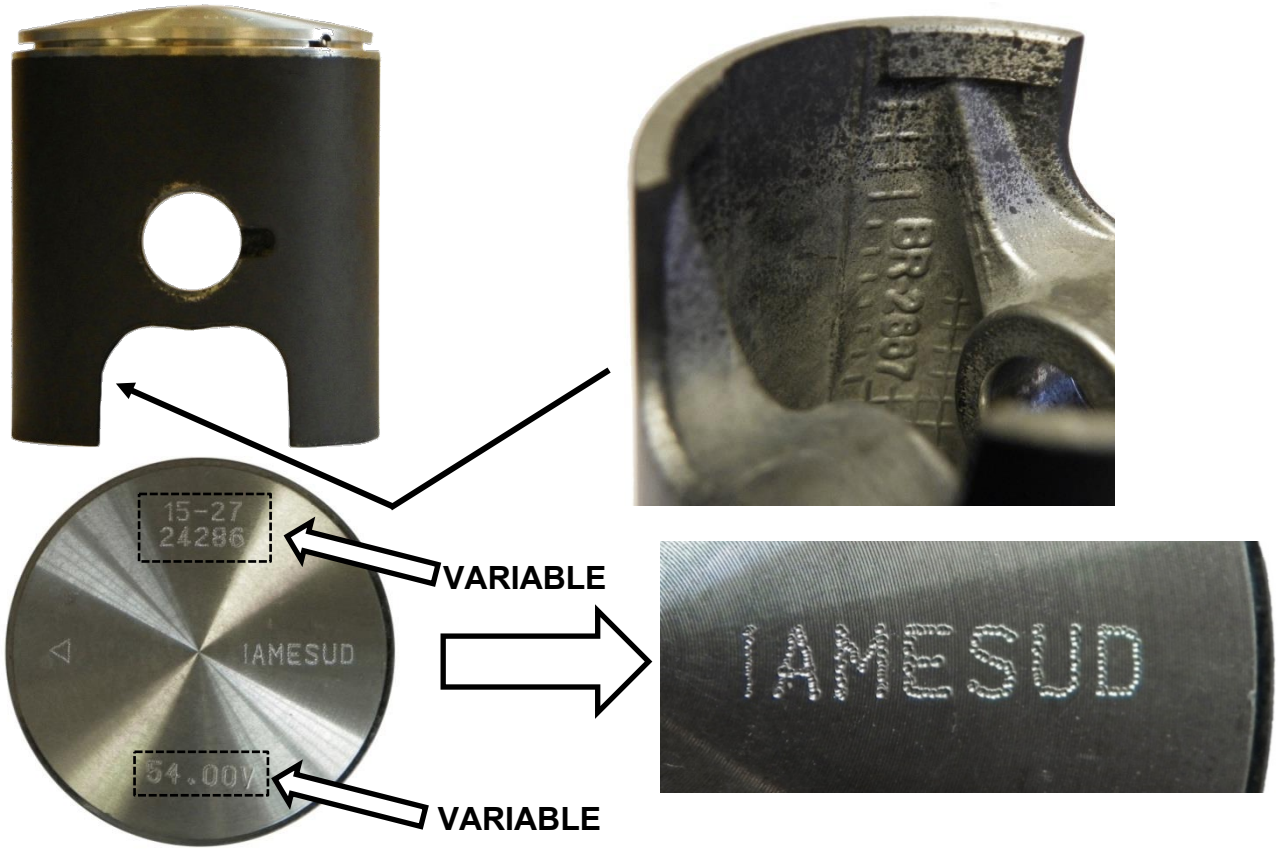

PHOTO IDENTIFICATION REED GROUP	
CURRENT VERSION	ALTERNATIVE VERSION
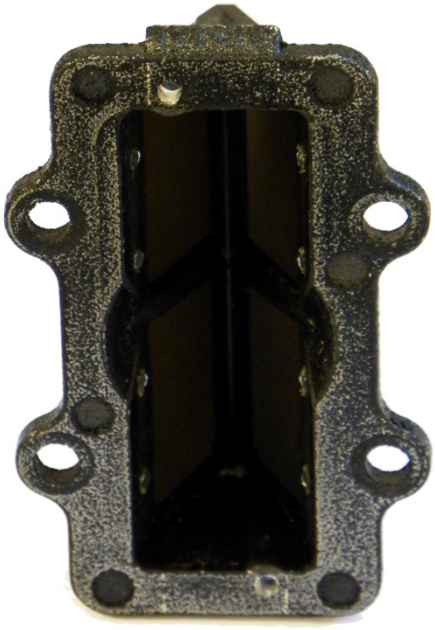	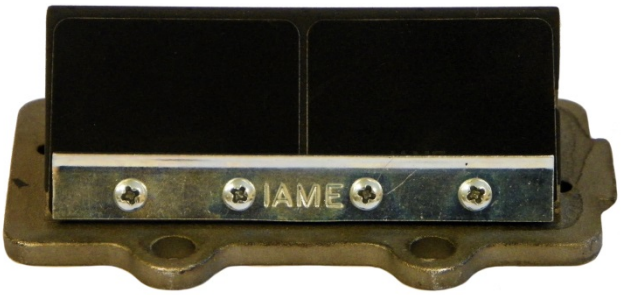

ALTERNATIVE CONROD

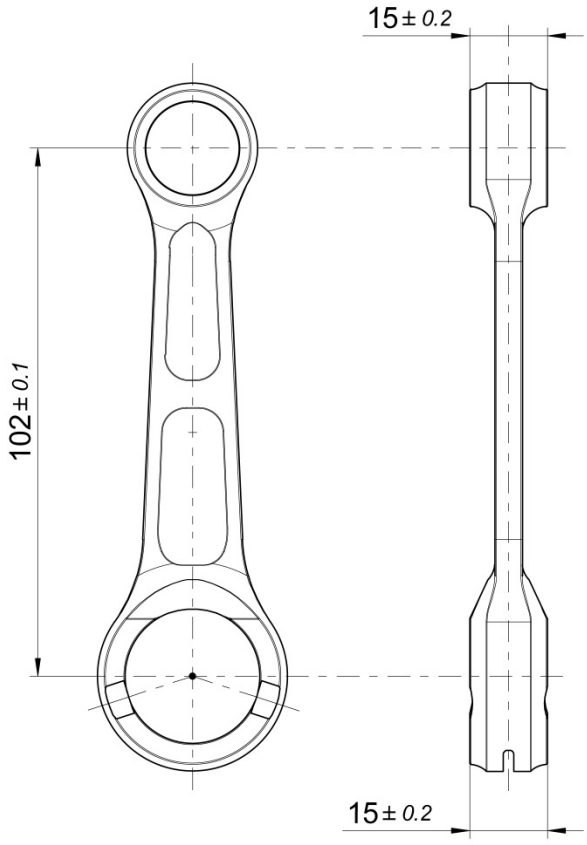

BOTH TYPES OF CONROD CAN BE USED WITH BOTH TYPES OF WASHERS (IN COUPLE)

PHOTO OF THE CONROD BOTH SIDE – ALTERNATIVE

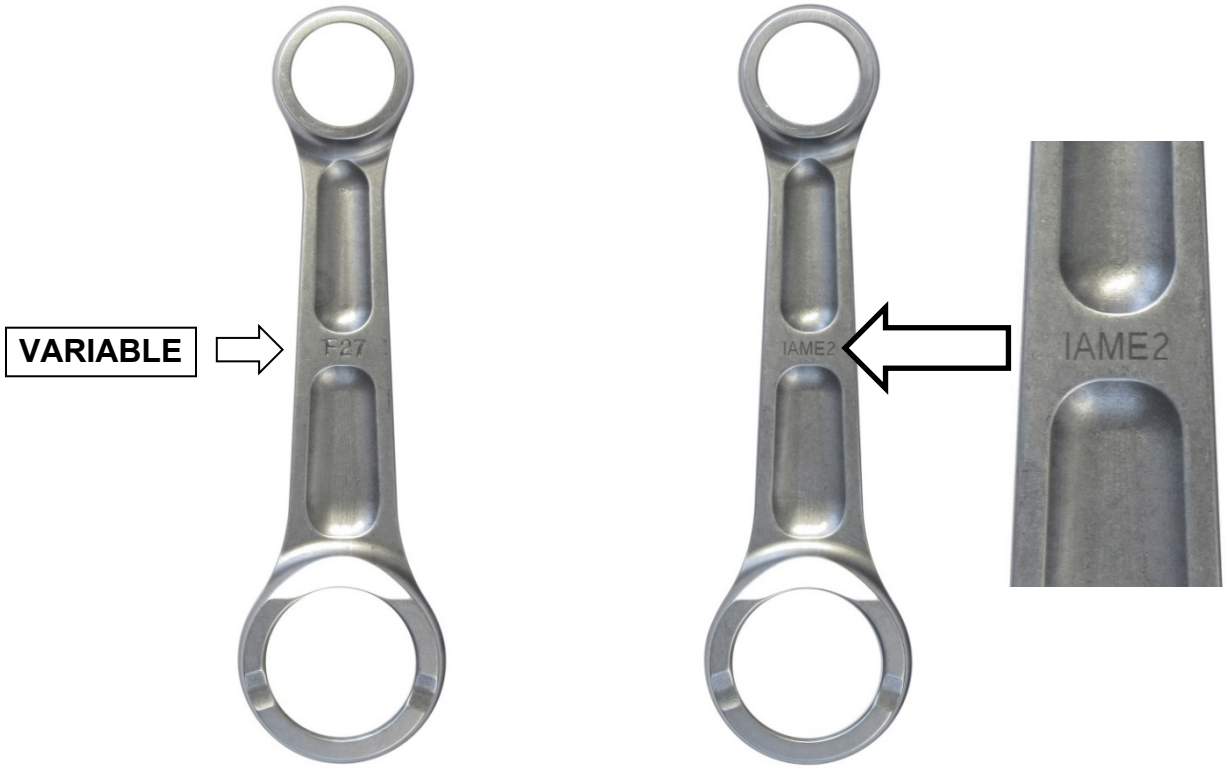

PHOTO IDENTIFICATION OF SMALL END CONROD BEARING – TYPES ALTERNATIVE
TYPE 1 TYPE 2
PHOTO IDENTIFICATION OF SILVER CONROD WASHER – TYPES ALTERNATIVE
TYPE 1 TYPE 2

PARTICULARS WITH ALTERNATIVE NEW LOGO “IAME”

CYLINDER HEAD	CYLINDER
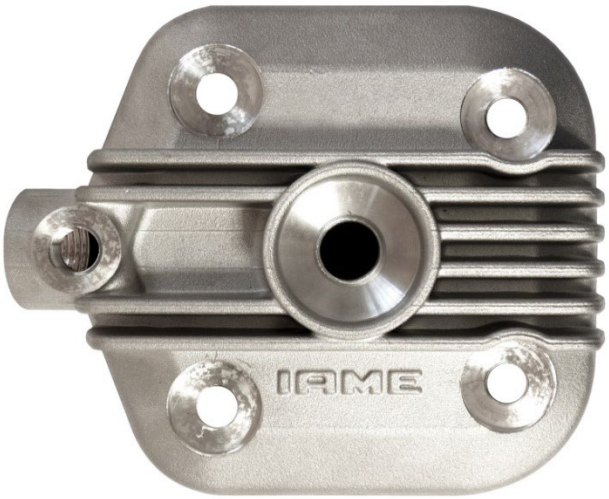 **NEW LOGO**	**NEW LOGO** 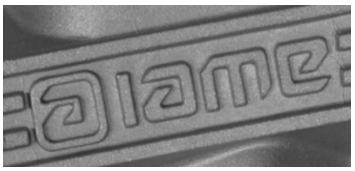
SEMICARTER TRASMISSION SIDE	SEMICARTER IGNITION SIDE
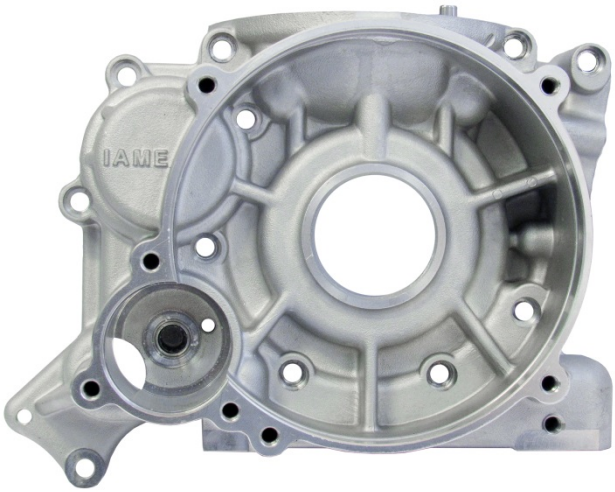 **NEW LOGO** 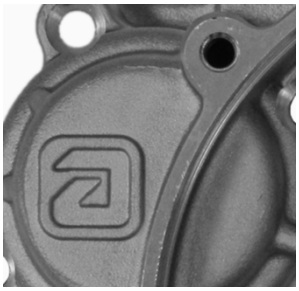	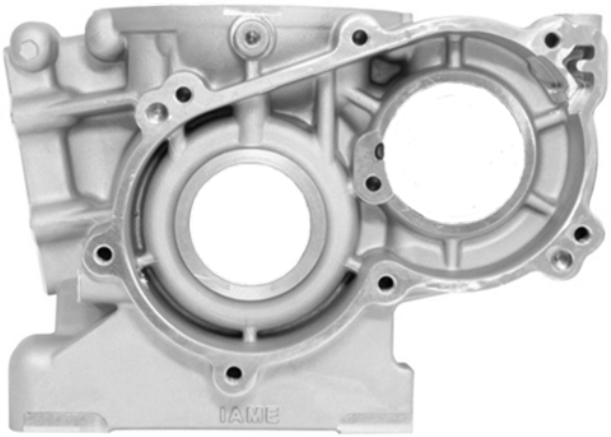 **NEW LOGO** 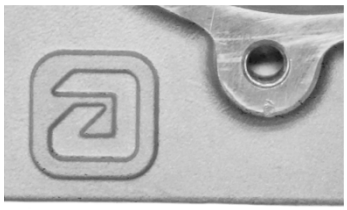

PARTICULARS WITH ALTERNATIVE NEW LOGO “IAME”

IGNITION COVER	CLUTCH COVER
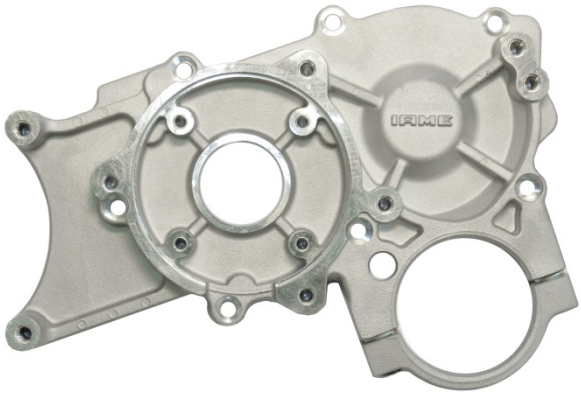 **NEW LOGO** 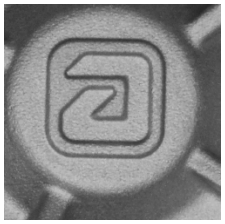	 **NEW LOGO**
REED GROUP	CARBURETTOR INLET CONVEYOR
 NEW LOGO 	 **NEW LOGO**

PARTICULARS WITH ALTERNATIVE NEW LOGO “IAME”

EXHAUST SILENCER	BALANCING SHAFT
	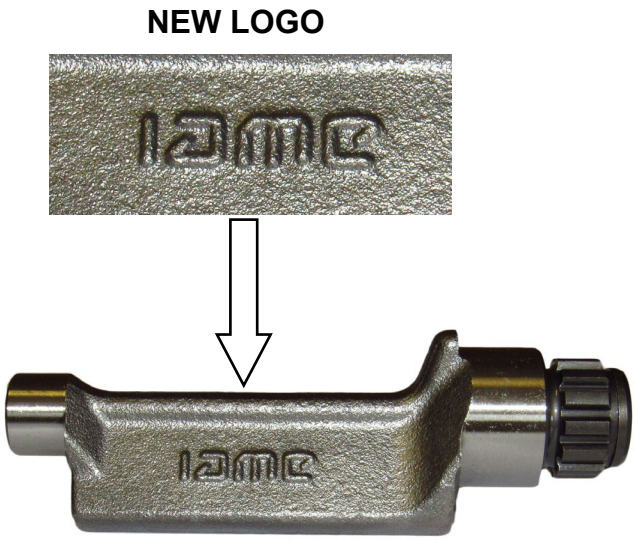

RADIATOR

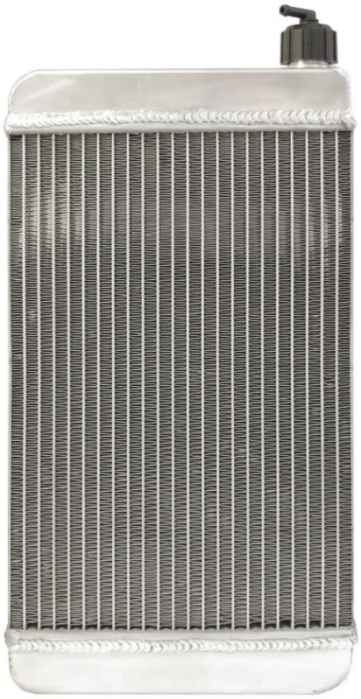

NEW LOGO

THE OTHERS COMPONENTS OF ENGINE THAT ARE MARKED (LASER OR PUNCHING) UNTIL TODAY WITH LOGO OR WRITTEN "IAME"

or

IAME

NOW COULD BE MARKED WITH NEW LOGO "IAME"

or

or

CHECKING THE SHAPE OF THE COMBUSTION CHAMBER

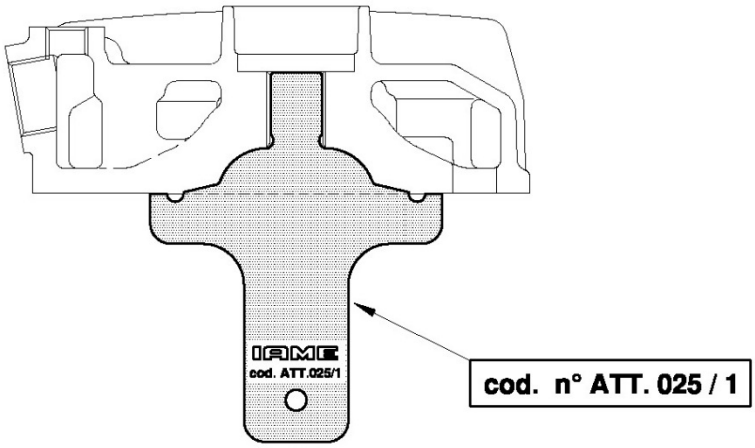

CONTROL OF THE PISTON DOME

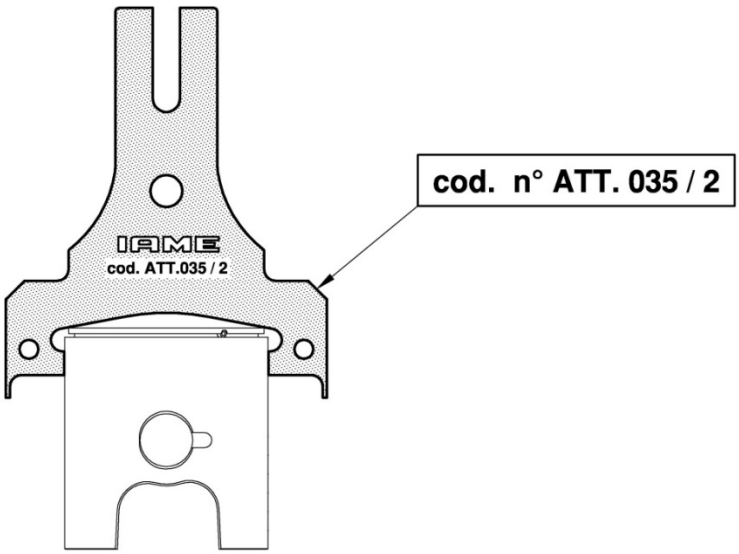

CONTROL OF THE VOLUME OF THE COMBUSTION CHAMBER

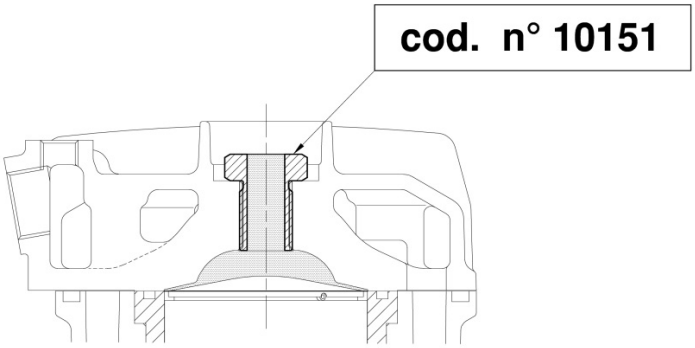

CYLINDER CHECK

CHECK OF EXHAUST DUCT AND LATERAL TRANSFERS

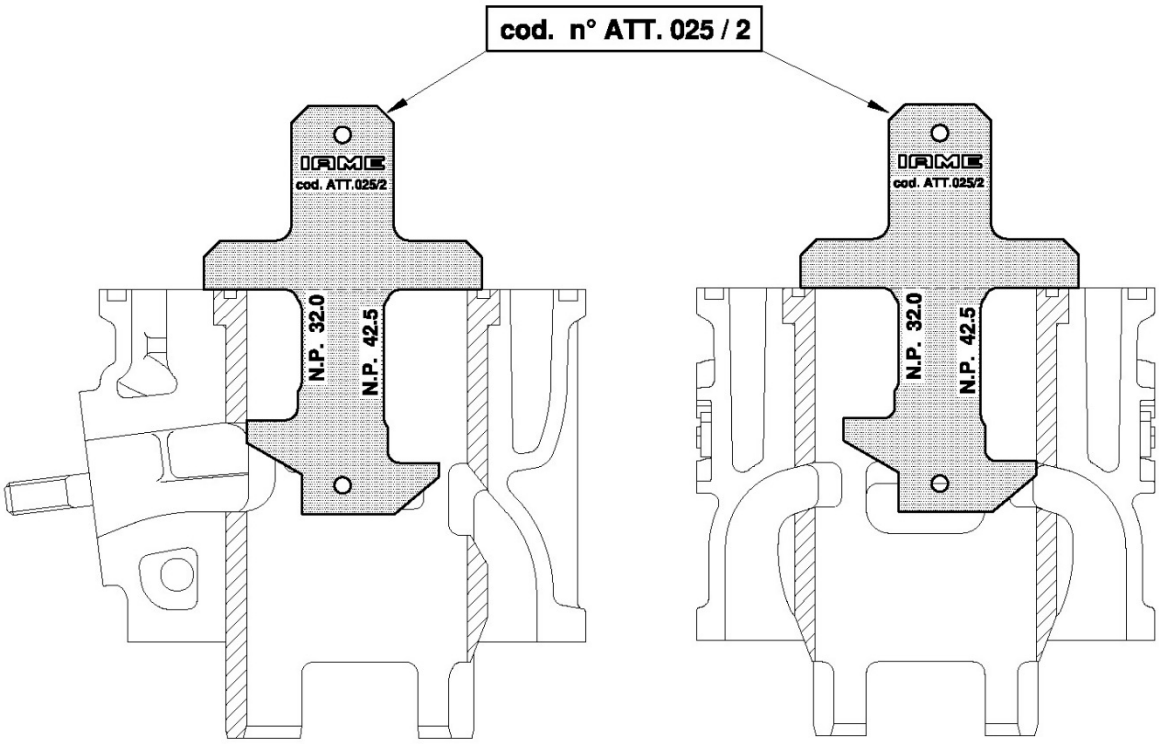

CYLINDER LINER DUCTS AND TRANSFERS CHECK TOOL

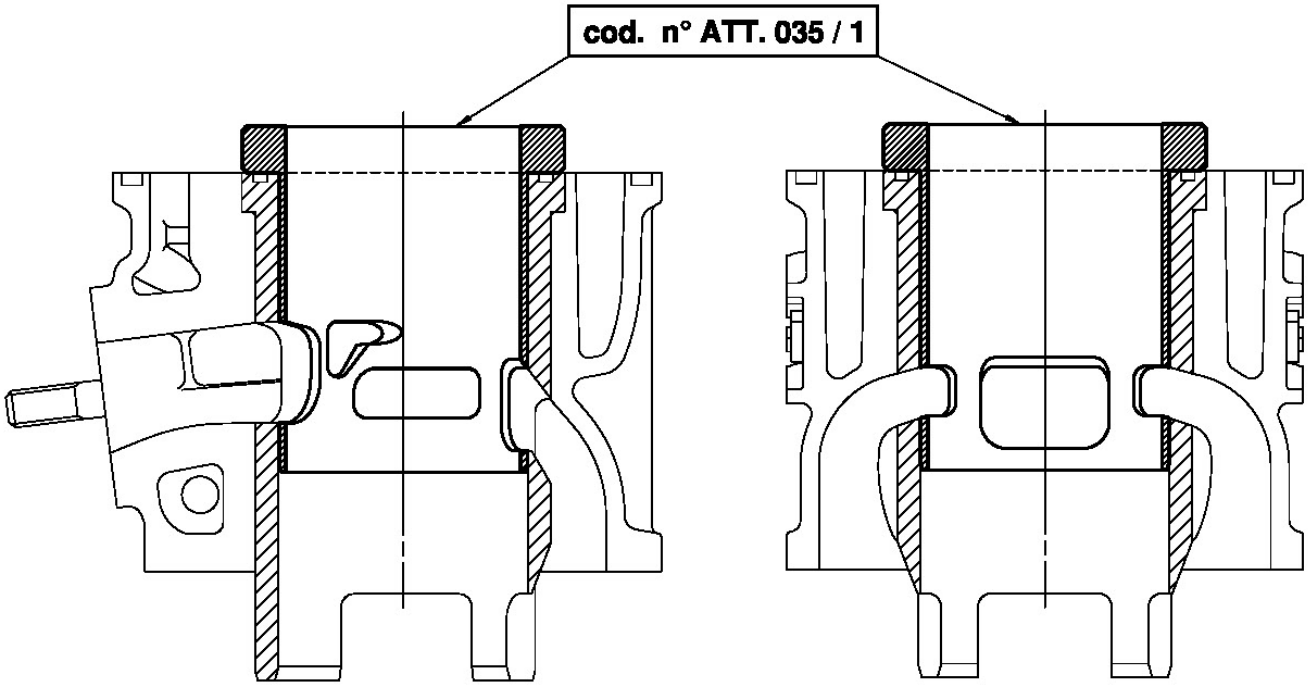

CLUTCH DRUM CHECK TOOL

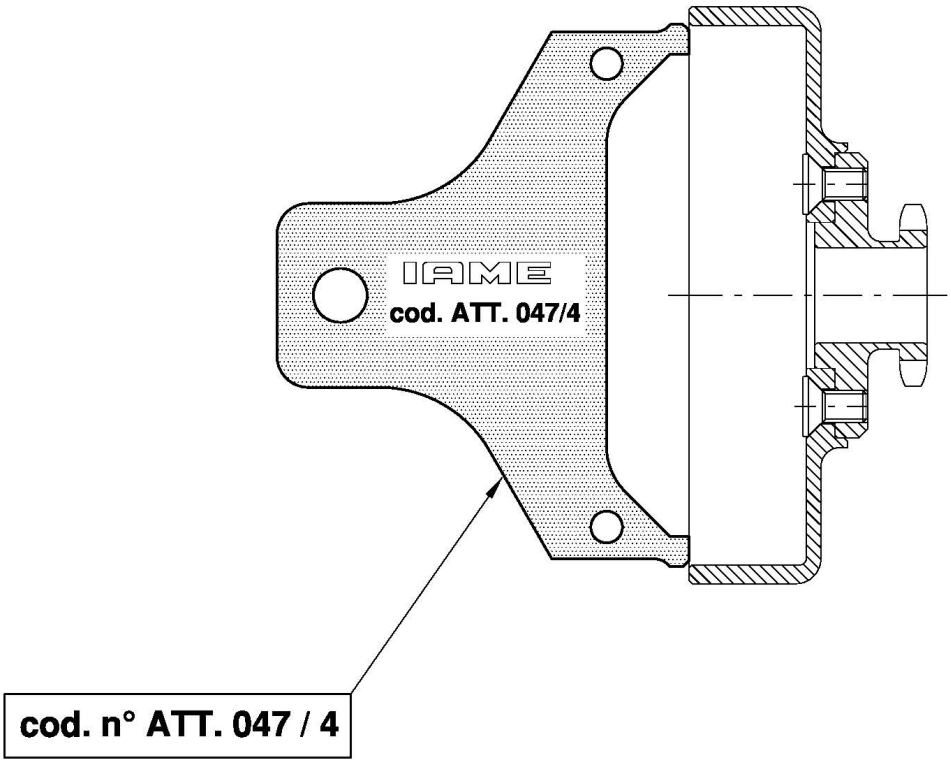

CRANKCASE CHECK TOOLS

CHECKING THE DISTANCE BETWEEN THE CILYNDER PINS

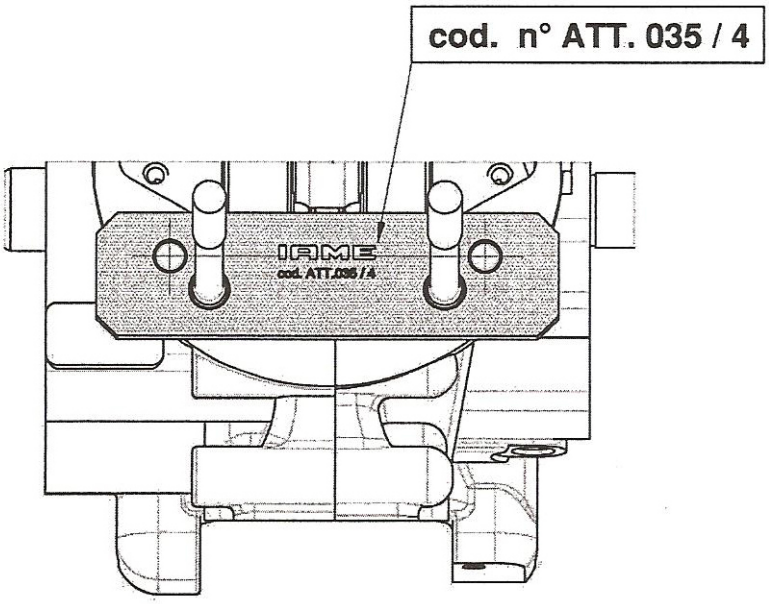

CONTROL OF THE HEIGHT OF THE JOINT PLANE

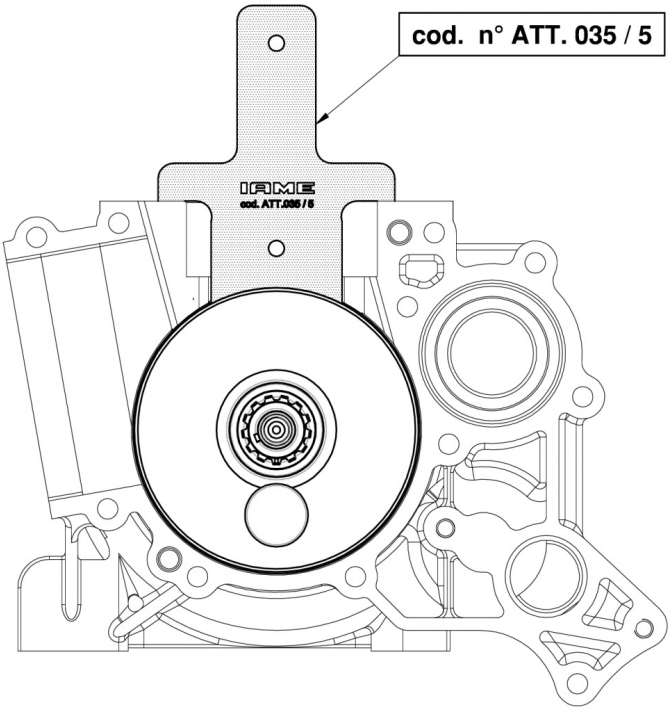

CHECKING OF THE REEDS VALVE SEAL PLANE

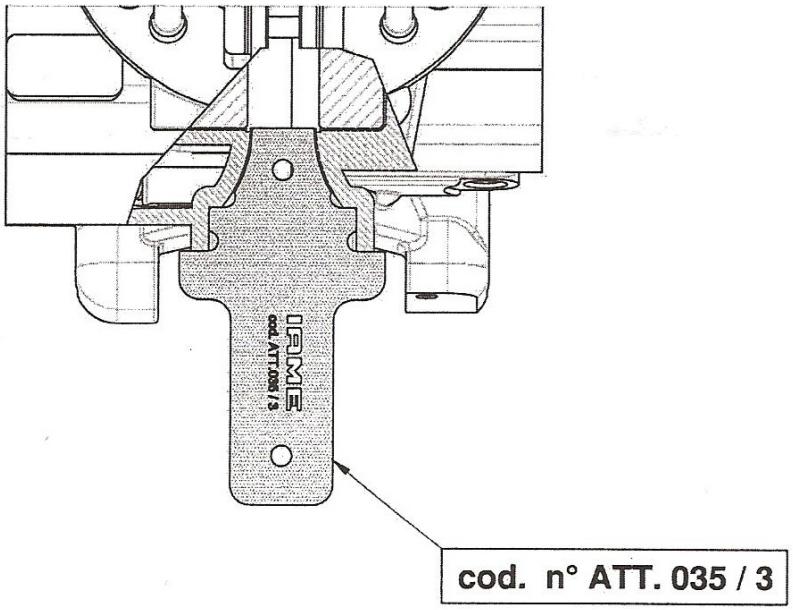

CONTROL OF THE POSITION OF SELETTRA DIGITAL "S" PHASE MARKING

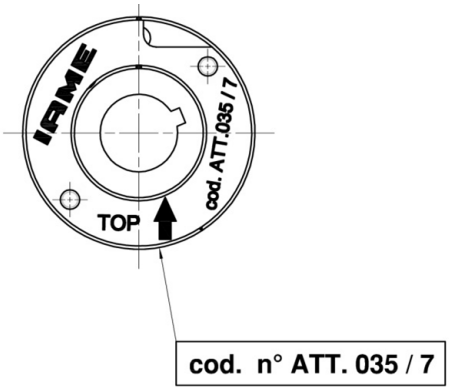

VENTURI SHAPE CONTROL OF TILLOTSON HW-27A CARBURETTOR

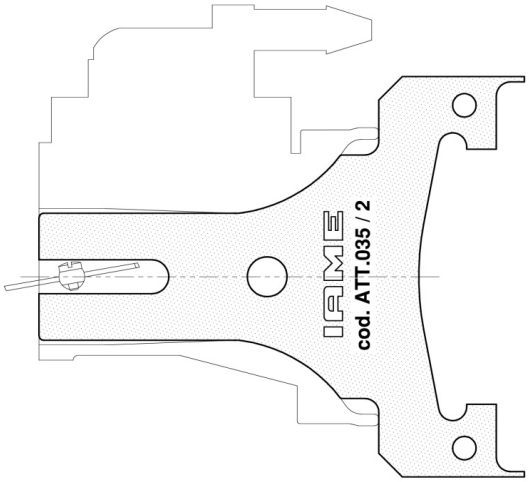

CHECK THAT THE TOOL DOES NOT ENTER INTO THE VENTURE DUCT INLET OF TILLOTSON HW-27A CARBURETTOR.

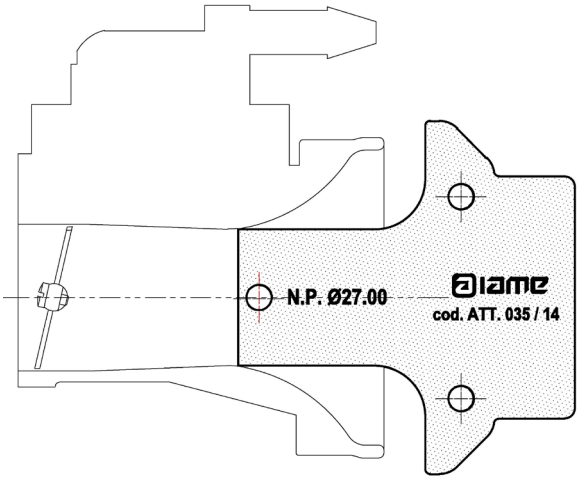

CHECK THE HIGHT OF ATOMIZER – GO IF IT'S OK

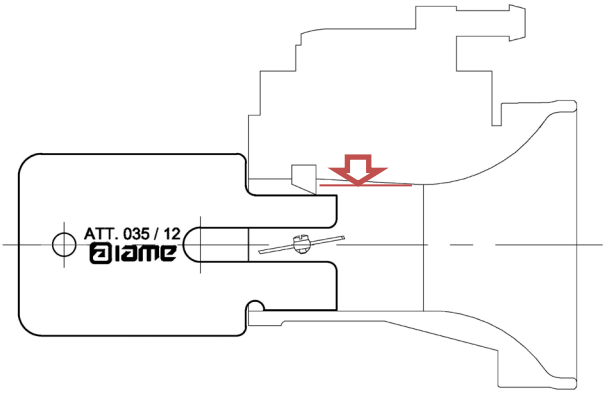

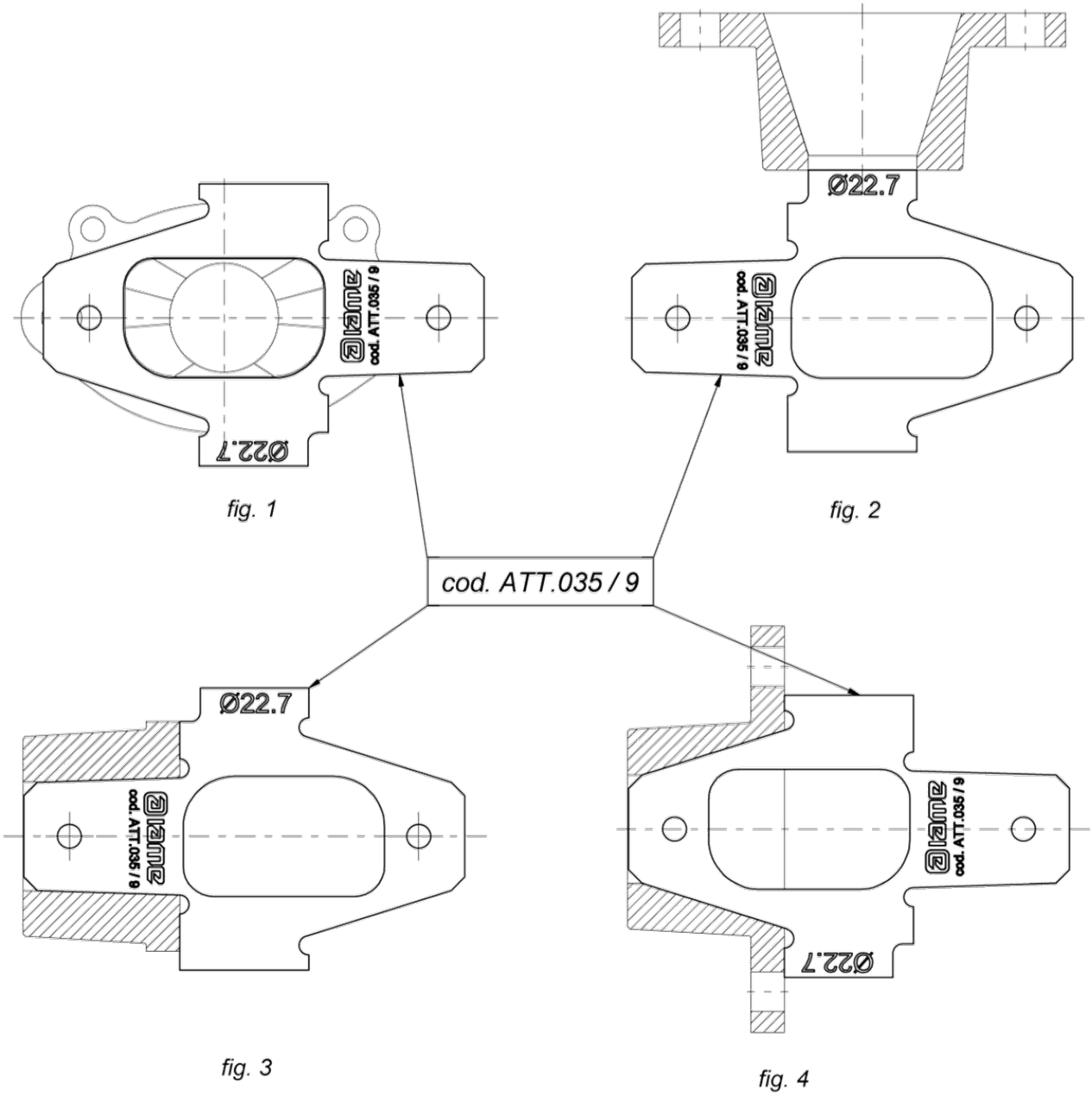

Scrutineer’s are supplied with a “No Go” Gauge & Profile Checking Tool that is manufactured by IAME. They are to be used as indicated herein.

1. CHECK THAT THE NO-GO GAUGE DOES NOT ENTER INTO THE EXHAUST RESTRICTOR. (fig.2)

2. CHECK THAT THE TOOL MATCHES THE SHAPE OF THE EXHAUST MANIFOLD. (fig.1,3 and 4)

CARBURETTOR

Tillotson HW-27A

PHOTO OF ADJUSTING SIDE	PHOTO OF INLET SIDE

Manufacturer	**TILLOTSON LTD.**
Make	**TILLOTSON**
Model	**HW-27A**

SECTION VIEW

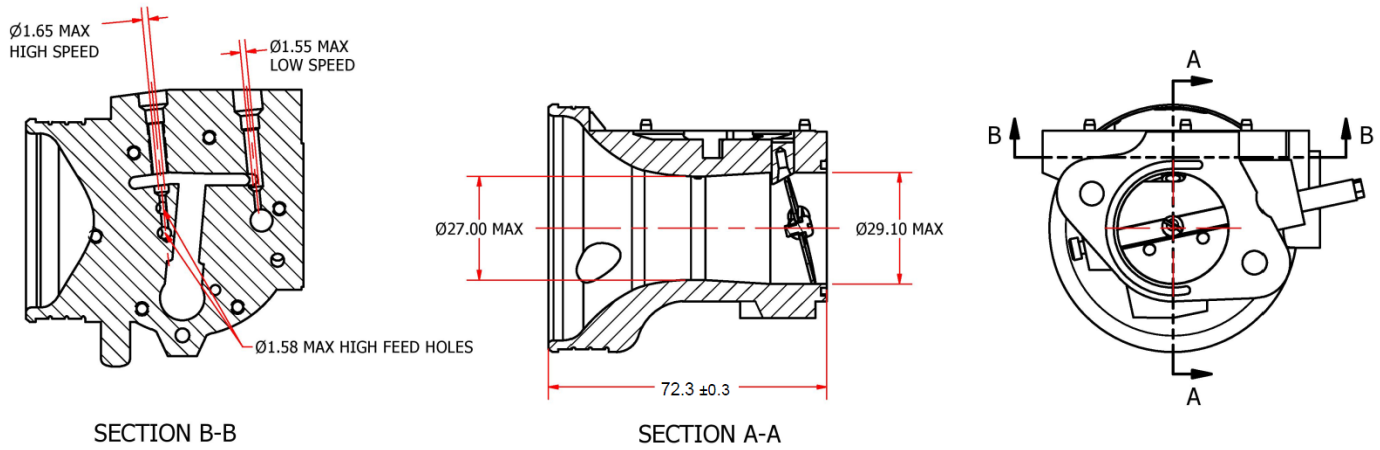

MARKING

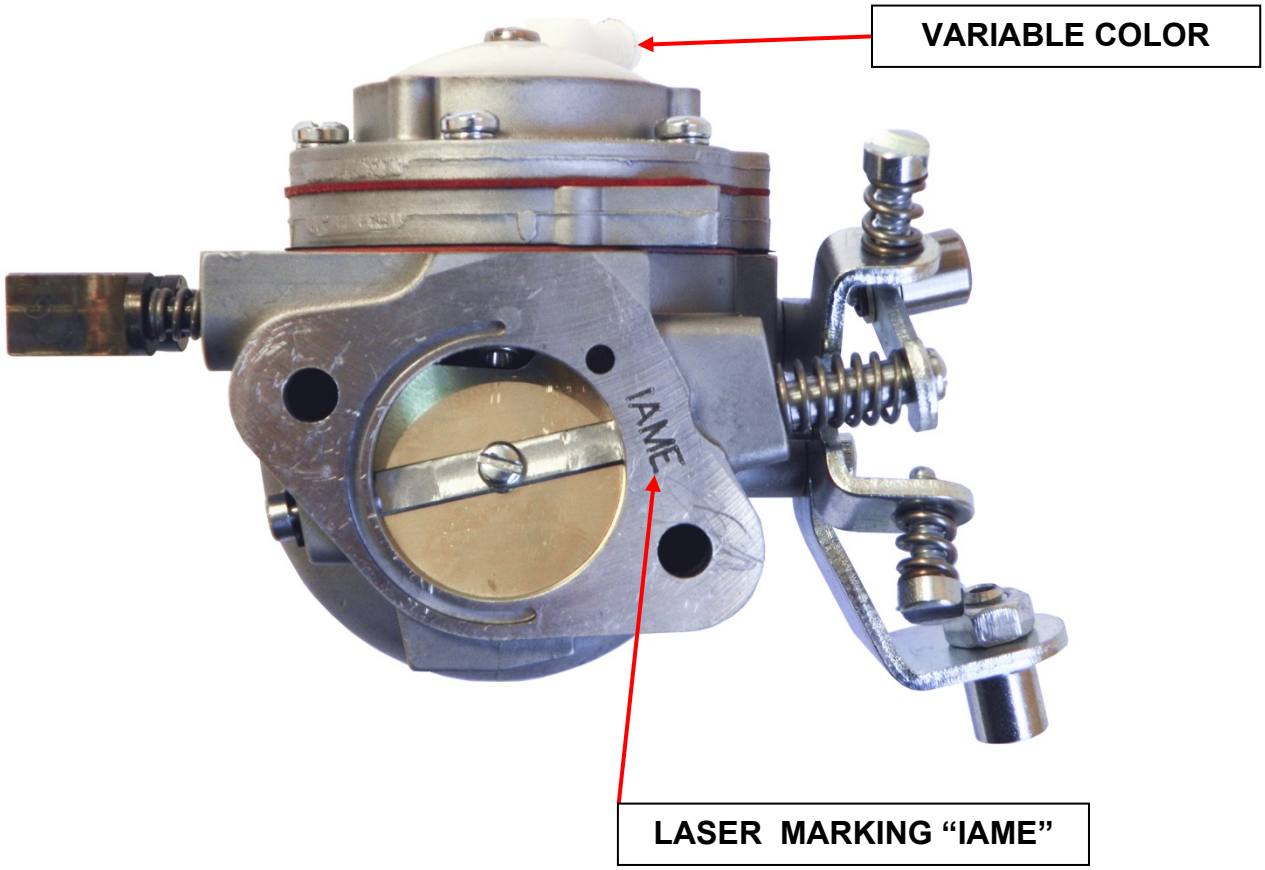

CARBURETTOR DESCRIPTION AND SKETCH OF PARTS

HW-27A

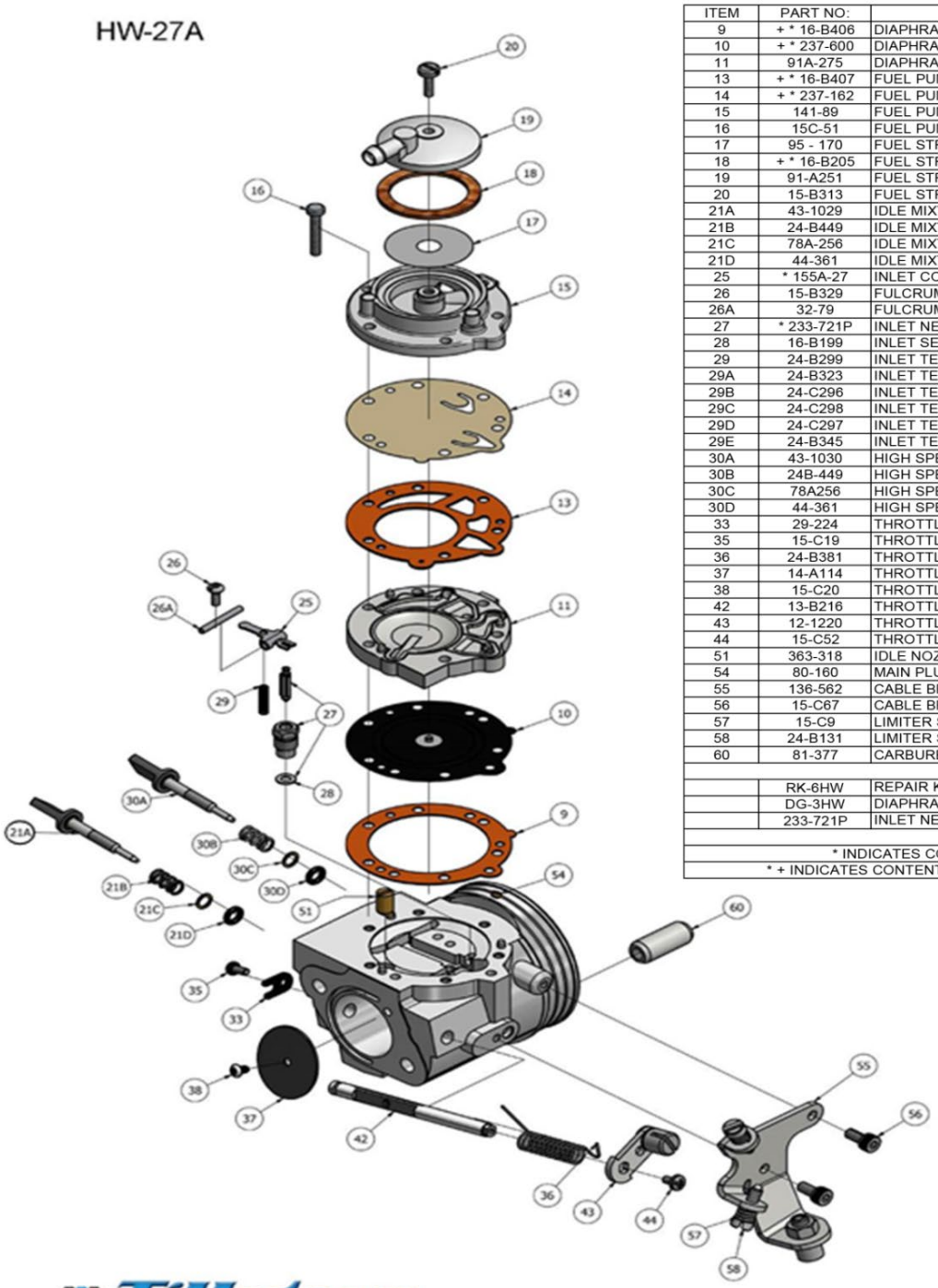

ITEM	PART NO:	DESCRIPTION	QTY
9	+ * 16-B406	DIAPHRAGM GASKET (ORANGE)	1
10	+ * 237-600	DIAPHRAGM	1
11	91A-275	DIAPHRAGM COVER	1
13	+ * 16-B407	FUEL PUMP GASKET (ORANGE)	1
14	+ * 237-162	FUEL PUMP DIAPHRAGM	1
15	141-89	FUEL PUMP BODY	1
16	15C-51	FUEL PUMP BODY SCREW	6
17	95 - 170	FUEL STRAINER SCREEN	1
18	+ * 16-B205	FUEL STRAINER COVER GASKET	1
19	91-A251	FUEL STRAINER COVER	1
20	15-B313	FUEL STRAINER COVER RETAINING SCREW	1
21A	43-1029	IDLE MIXTURE SCREW	1
21B	24-B449	IDLE MIXTURE SCREW SPRING	1
21C	78A-256	IDLE MIXTURE SCREW WASHER	1
21D	44-361	IDLE MIXTURE SCREW PACKING	1
25	* 155A-27	INLET CONTROL LEVER	1
26	15-B329	FULCRUM LEVER SCREW	1
26A	32-79	FULCRUM LEVER PIN	1
27	* 233-721P	INLET NEEDLE & SEAT SET	1
28	16-B199	INLET SEAT GASKET	1
29	24-B299	INLET TENSION SPRING (STD 37 grams)	1
29A	24-B323	INLET TENSION SPRING (26 grams)	1
29B	24-C296	INLET TENSION SPRING (31 grams)	1
29C	24-C298	INLET TENSION SPRING (42 grams)	1
29D	24-C297	INLET TENSION SPRING (46 grams)	1
29E	24-B345	INLET TENSION SPRING (48 grams)	1
30A	43-1030	HIGH SPEED MIXTURE SCREW	1
30B	24B-449	HIGH SPEED MIXTURE SCREW SPRING	1
30C	78A256	HIGH SPEED MIXTURE SCREW WASHER	1
30D	44-361	HIGH SPEED MIXTURE SCREW PACKING	1
33	29-224	THROTTLE SHAFT CLIP	1
35	15-C19	THROTTLE SHAFT CLIP RETAINING SCREW	1
36	24-B381	THROTTLE RETURN SPRING	1
37	14-A114	THROTTLE SHUTTER	1
38	15-C20	THROTTLE SHUTTER SCREW	1
42	13-B216	THROTTLE SHAFT	1
43	12-1220	THROTTLE LEVER ASSEMBLY	1
44	15-C52	THROTTLE LEVER RETAINING SCREW	1
51	363-318	IDLE NOZZLE	1
54	80-160	MAIN PLUG	2
55	136-562	CABLE BRAKET	1
56	15-C67	CABLE BRACKET RETAINING SCREW	2
57	15-C9	LIMITER SCREW	2
58	24-B131	LIMITER SPRING	2
60	81-377	CARBURETTOR MOUNTING NUT	2
	RK-6HW	REPAIR KIT	
	DG-3HW	DIAPHRAGM & GASKET (STANDARD)	
	233-721P	INLET NEEDLE & SEAT SET	
* INDICATES CONTENTS OF REPAIR KIT			
* + INDICATES CONTENTS OF DIAPHRAGM & GASKET SET			

Tillotson RACING

Clash Industrial Estate - Tralee - Ireland
www.tillotson-racing.com

PARTS OF CARBURETTOR

REF.9 - P. N°16-B406
DIAPHRAGM GASKET (ORANGE COLOR)

Thickness = 0.5 ±0.1 mm

REF.13 - P. N° 16-B407
PUMP DIAPHRAGM GASKET (ORANGE COLOR)

Thickness = 0.8 ±0.1 mm

REF.10 - P. N°237-600
DIAPHRAGM

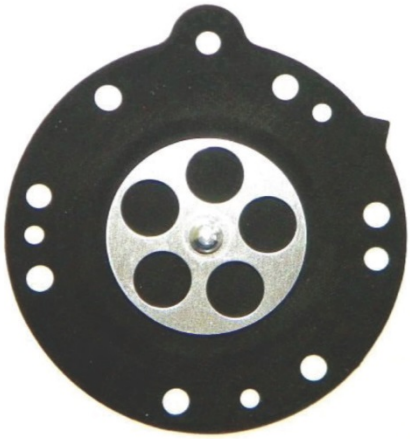

Thickness = 0.13 ±0.07 mm

REF.14 - P. N°237-162
PUMP DIAPHRAGM

ALTERNATIVE

Thickness = 0.10 ±0.063 mm

REF.11 - P. N° 91-A275
DIAPHRAGM COVER

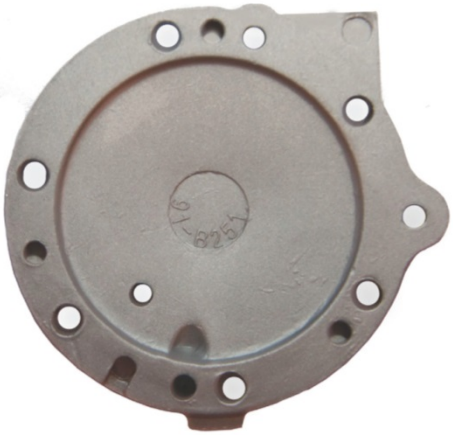

Thickness = 6.75 ±0.15 mm

REF.15 - P. N° 141-89
PUMP COVER

Thickness = 12.5 ±0.15 mm

REF.37 - P. N° 14-A114
THROTTLE SHUTTER

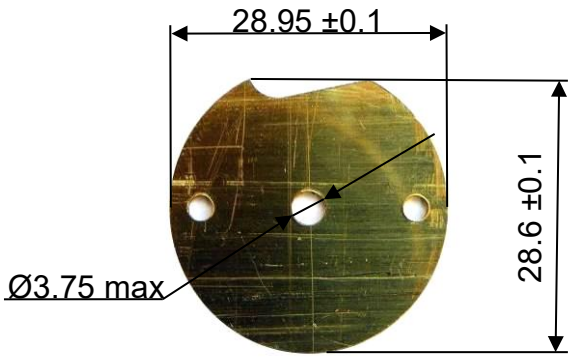

Thickness = 0.81 ±0.1 mm

REF.27 - P. N° 233-721P
SEAT + NEEDLE

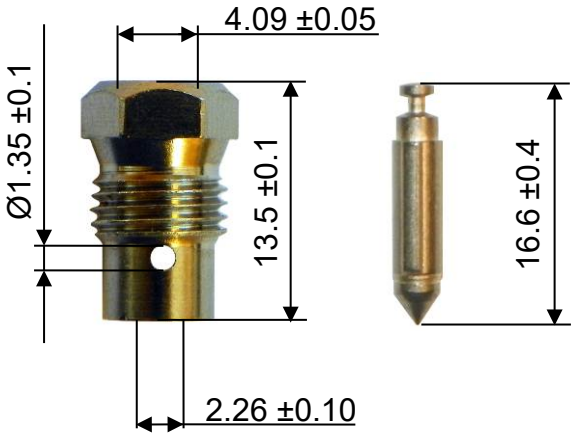

REF.21A - P. N° 43-1029
NEEDLE LOW SPEED

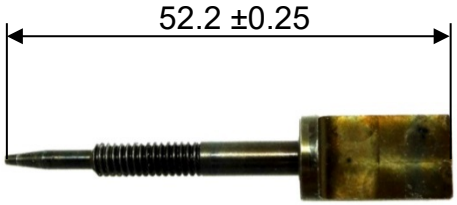

REF.30A - P. N° 43-1030
NEEDLE HIGH SPEED

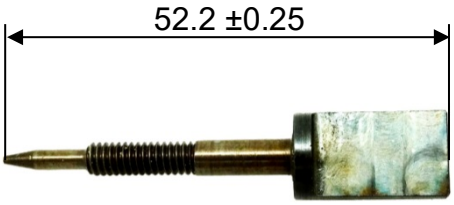

ALTERNATIVE THROTTLE SHUTTER
REF. 37 - P. N° 14-A114
(made from production tooling)

ALTERNATIVE FUEL NEEDLE

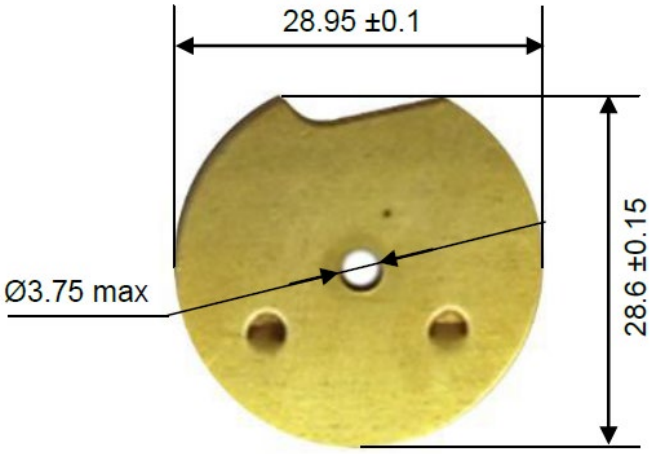

Thickness = 0.81 ±0.1 mm

REF.27 - P. N° 233-721P

HOLE FOR CARBURETTOR SEALING

The carburettor can have this hole for sealing.

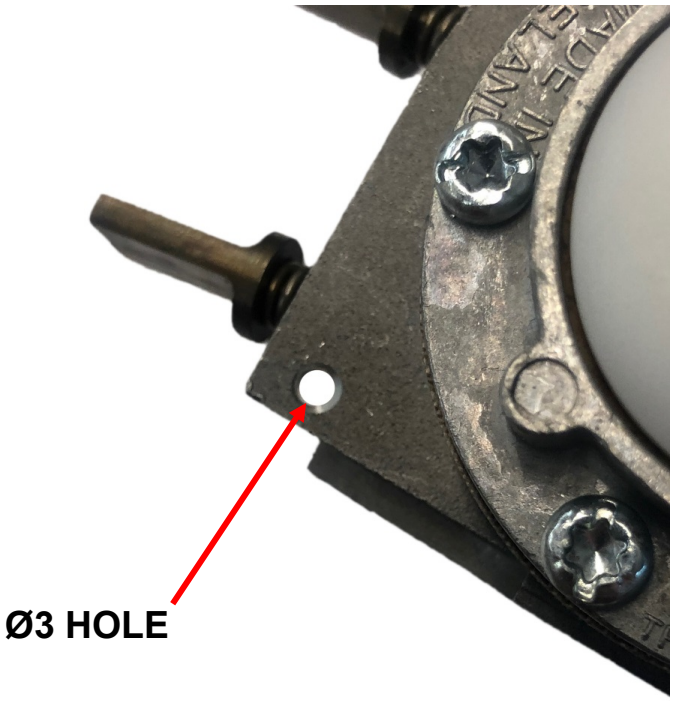
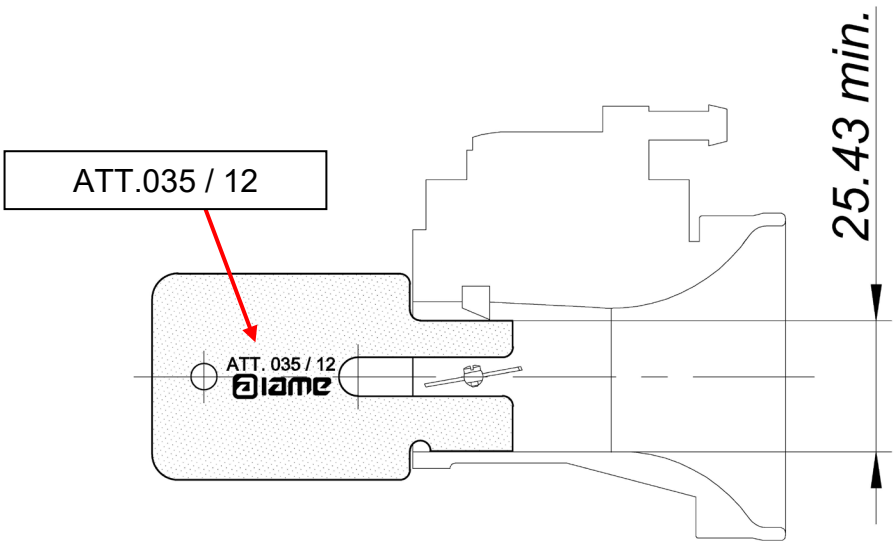
ATOMIZER HIGHT LIMITS AND CHECKING TOOL