60CC MINI SWIFT USA - TaG

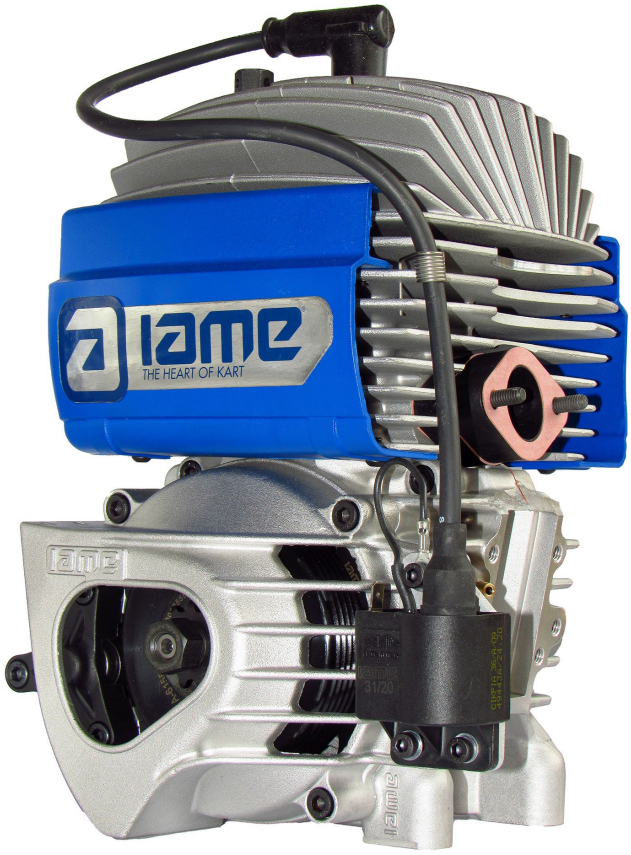

FEATURES	
Cylinder Volume	60.00 cm³ max
Bore	41.80 mm
Max. theoretical bore	42.07 mm
Stroke	43.15 mm max
Cooling system	Air
Inlet system	Piston valve
Number of carbs	1

Tillotson Carburettor	**HW-31A** (Venturi Ø17mm)	Cylinder / crankcase transfers n°	2 / 2
Number of piston rings	1	Inlet / exhaust ports number	1 / 1
Big end conr. ball-bearing diam.	18x24x15	Combustion chamber shape	Spherical
Crankshaft ball-bearing diam.	20x47x14	Selettra ignition (adjustable)	Analogue 2 Poles
Small end conr. ball-bearing diam.	12x16x16	Distance between Conrod centers	88 mm

DESCRIPTION OF THE MATERIAL		PISTON
Conrod material	Steel	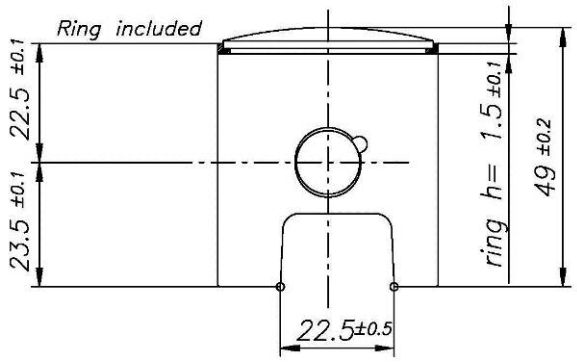 Min Weight (ring included) 60 g
Crankshaft material	Steel	
Head Material	Aluminum	
Cylinder Material	Aluminum	
Liner material	Cast Iron	DISTANCE BETWEEN CONROD CENTERS
Crankcase material	Aluminum	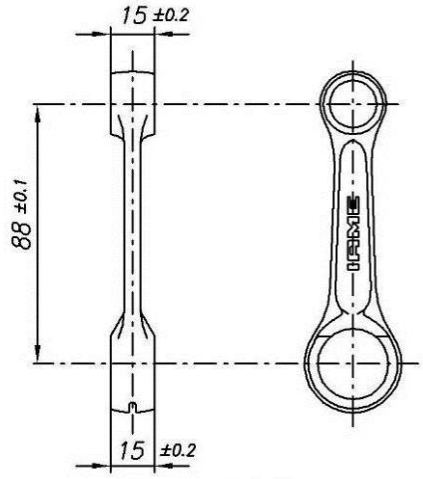 Min Weight 80 g
Piston material	Aluminum	
Piston rings material	Cast Iron	
Exhaust muffler material	Sheet-steel	
Ball-bearings	6204 type	

CRANKSHAFT

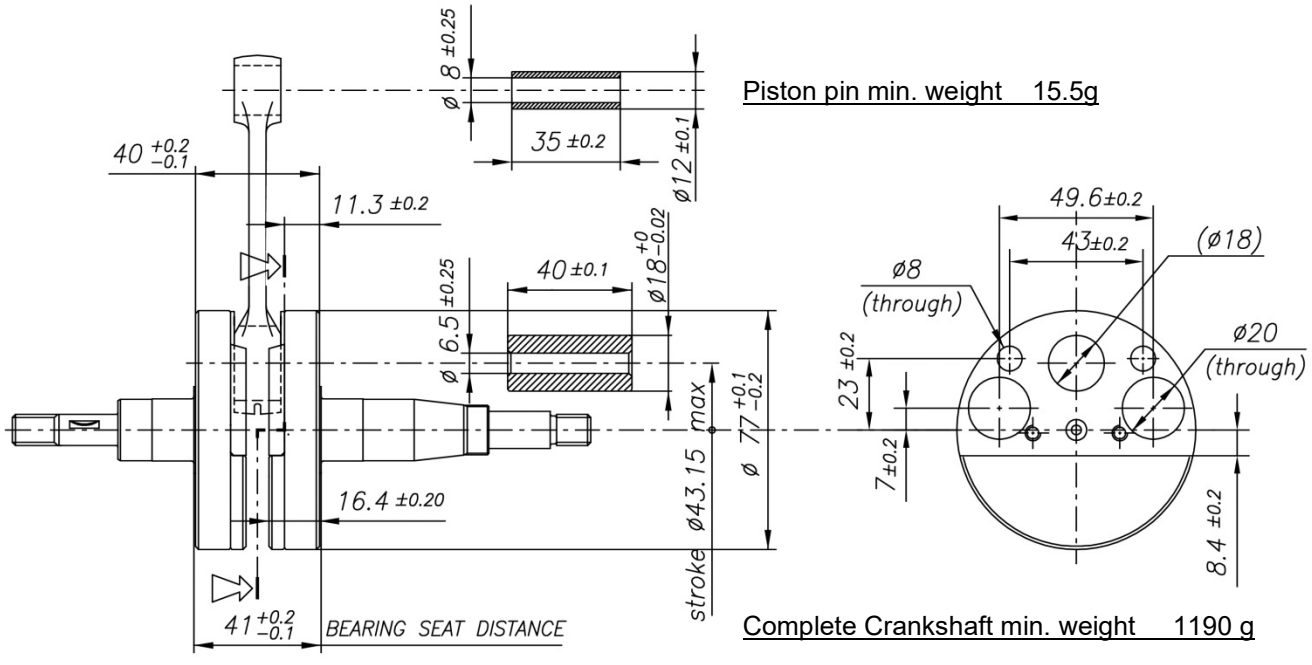

Piston pin min. weight 15.5g

Complete Crankshaft min. weight 1190 g

CYLINDER DEVELOPMENT

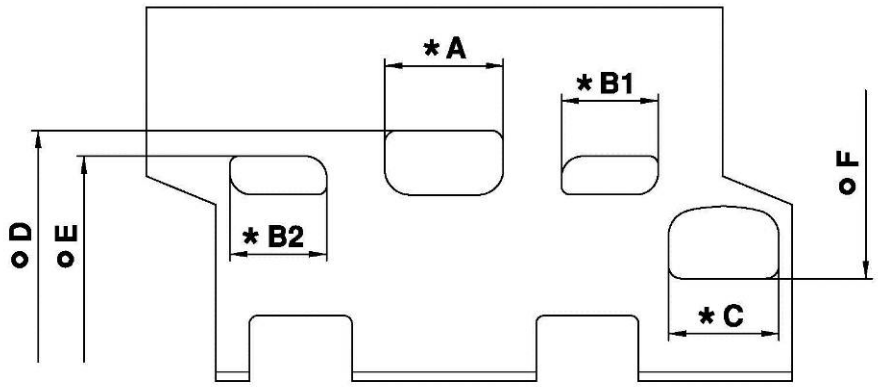

TOOL IAME Cod. 10194

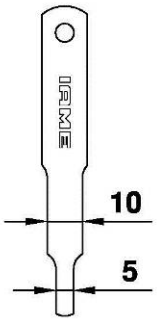

A	≤ 28.5 mm
B1 = B2	≤ 22.3 mm
C	≤ 26.5 mm
D	155.5° ±2°
E	115.5° ±2°
F	143.0° ±2°

* CHORDAL READING

o ANGULAR READING BY INSERT A 0.2x5 mm GAUGE
USING IAME TOOL Cod. 10194

CYLINDER BASE VIEW

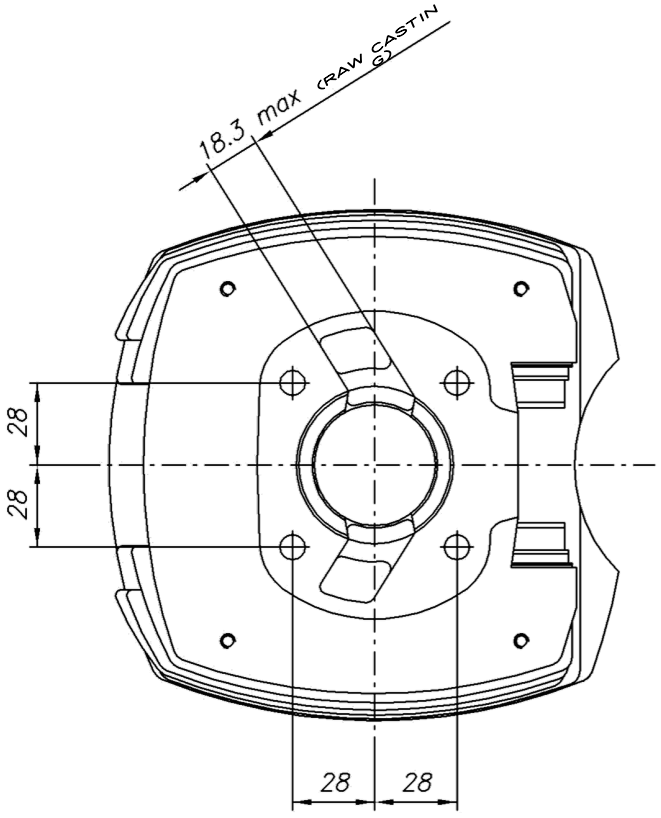

CYLINDER SECTION VIEW

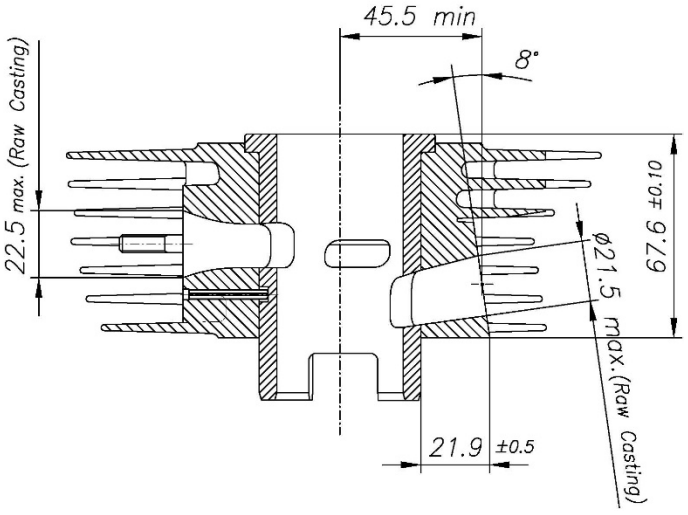

COMBUSTION CHAMBER VIEW	CRANKCASE INSIDE VIEW
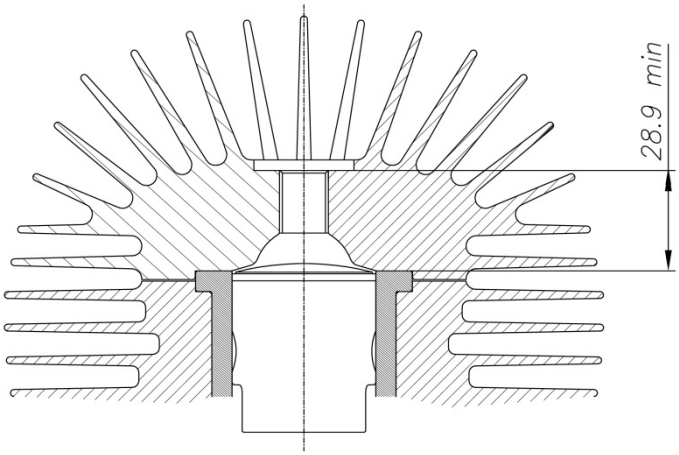	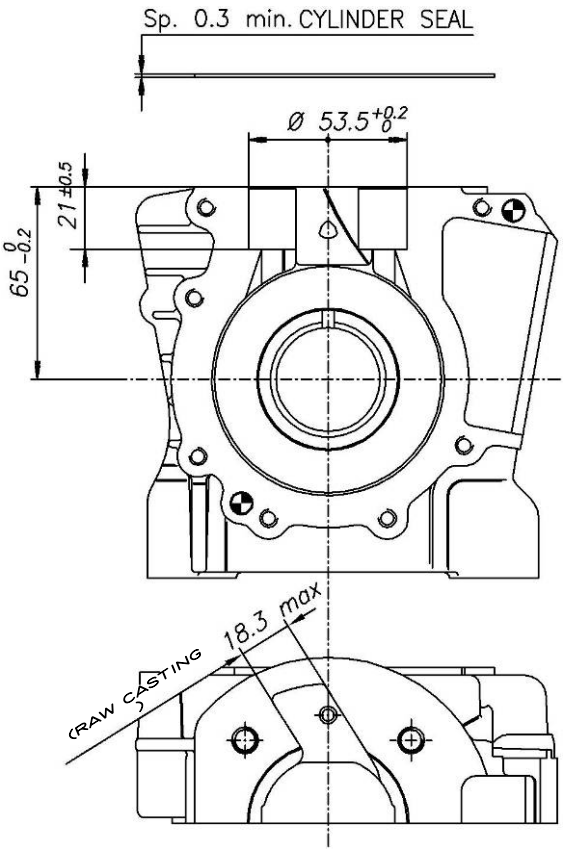
SQUISH MIN.= 0.025" (0.635 mm) ***(measured with 0.0625" (1/16") / Ø1.6mm solder)***	

VENTURI CARB. DIMENSIONS and THERMAL SPACERS

Q.ty: 1

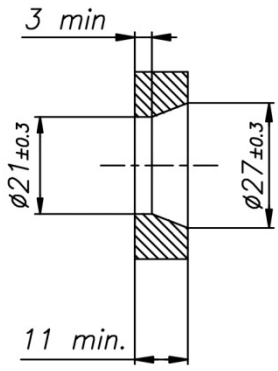

Q.ty: 1

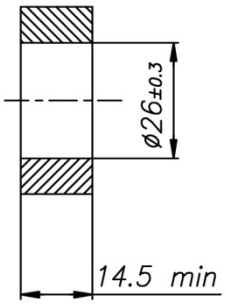

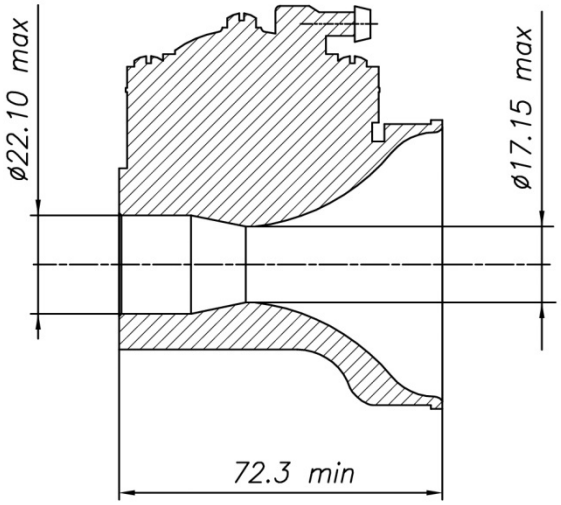

TILLOTSON MOD. HW-31A

INLET SILENCER

(CSAI OMOLOGATION N° 01/SA/14)

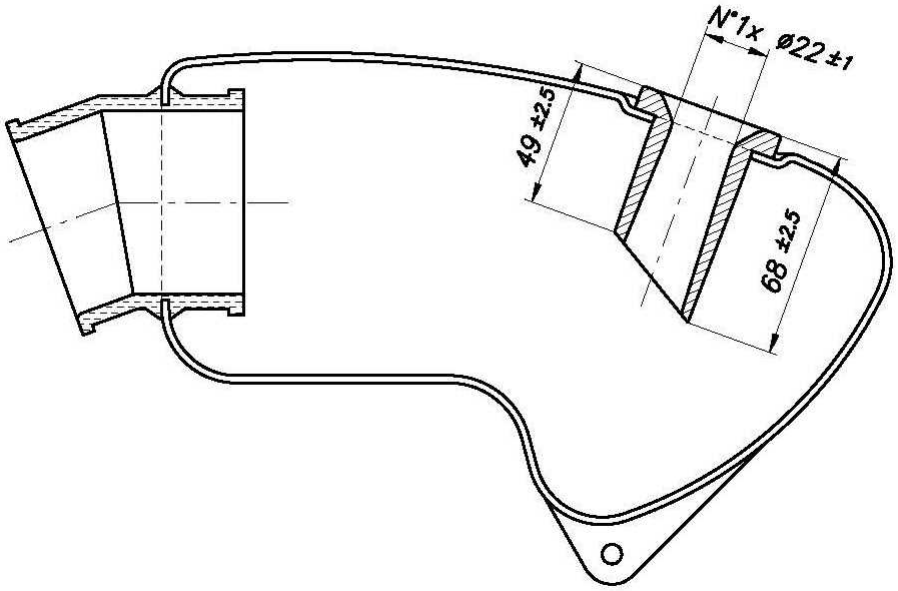

INLET SILENCER ALTERNATIVE MANIFOLD WITH SPONGE FILTER

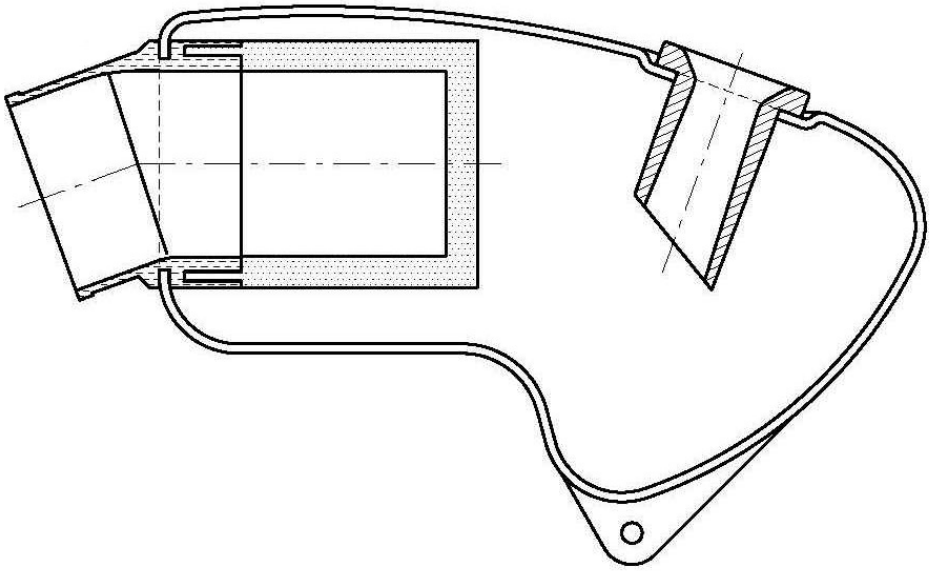

DESCRIPTION OF THE CLUTCH – TYPE1

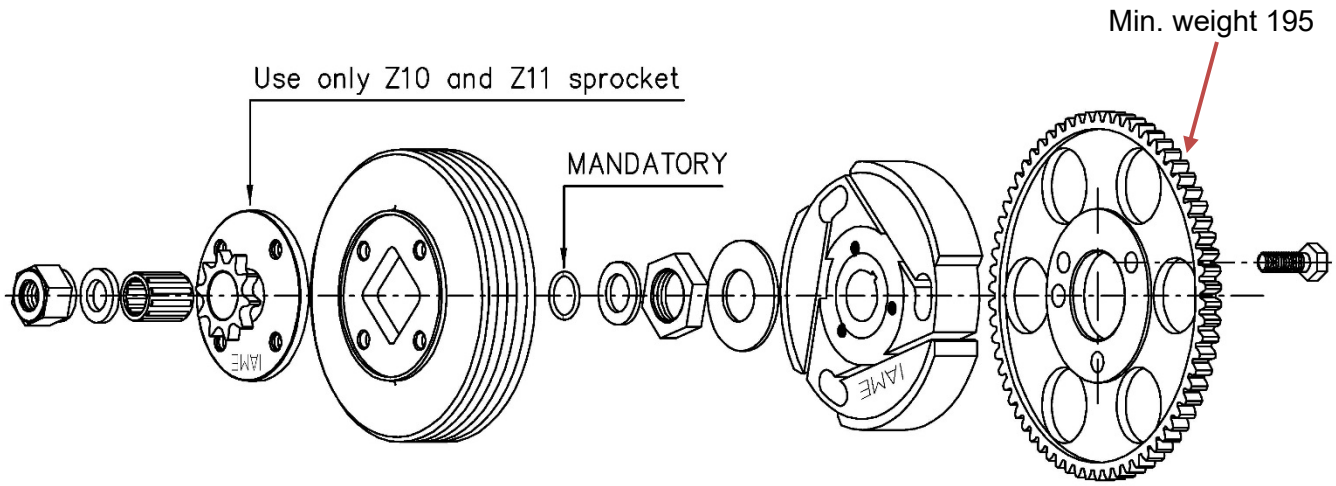

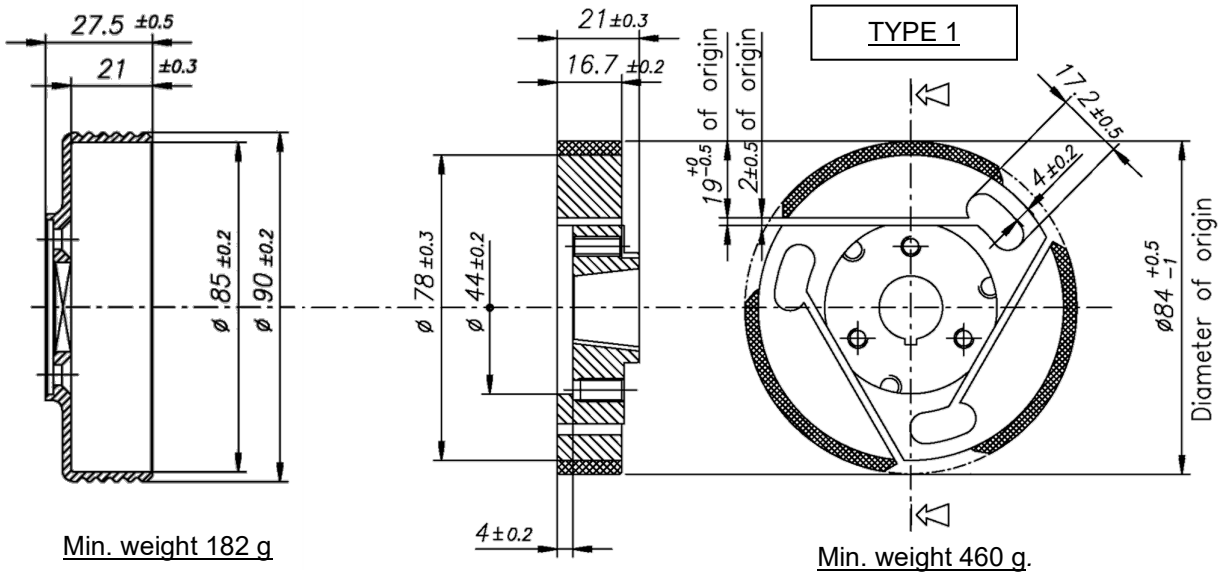

Min. weight 182 g

Min. weight 460 g.

EXHAUST MUFFLER VIEW AND DIMENSIONS

Min. weight 1250 g

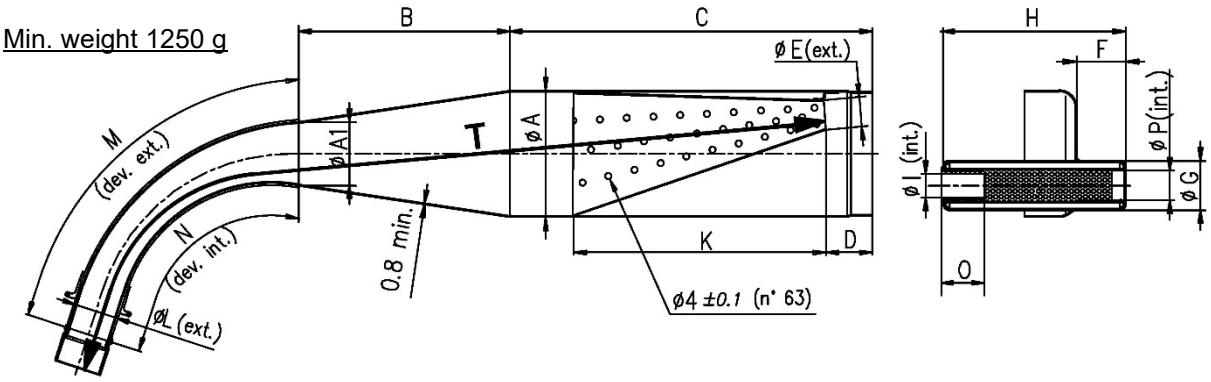

A: 90 ±1.5	**C:** 260 ±3	**F:** 35 ±2	**I:** 17 max	**M:** 240 ±3	**P:** 21 ±1
A1: 45 ±1	**D:** 30 ±1.5	**G:** 35 ±1	**K:** 181 ±3	**N:** 190 ±3	**T:** 600 ±5
B: 150 ±3	**E:** 20 ±1	**H:** 132 ±2	**L:** 31 ±1.5	**O:** 30 min.	

DESCRIPTION OF THE ALTERNATIVE CLUTCH – TYPE 2

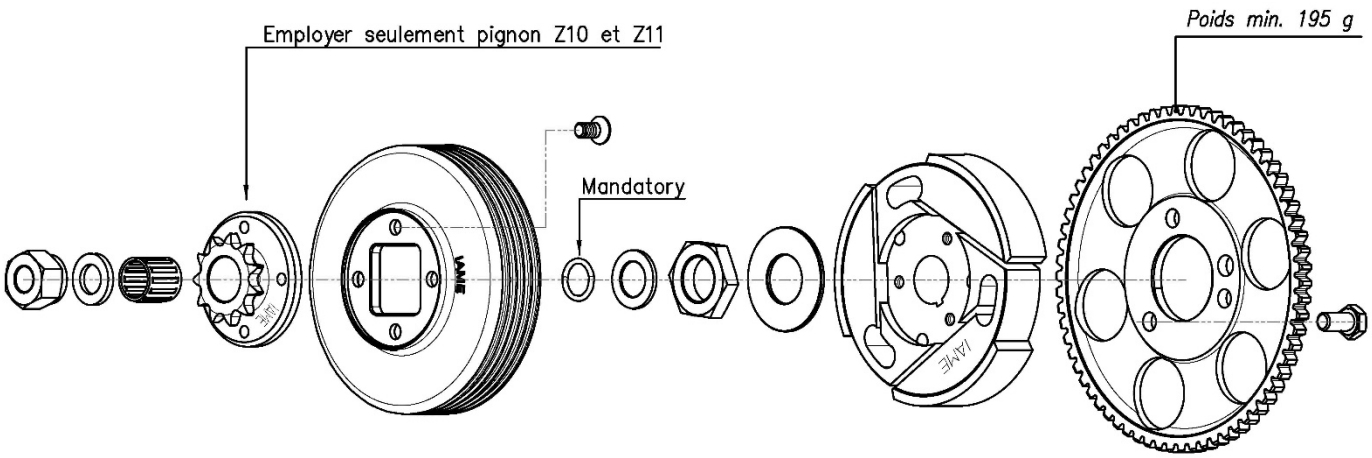

ALTERNATIVE CLUTCH HUB DRAWING – TYPE 2

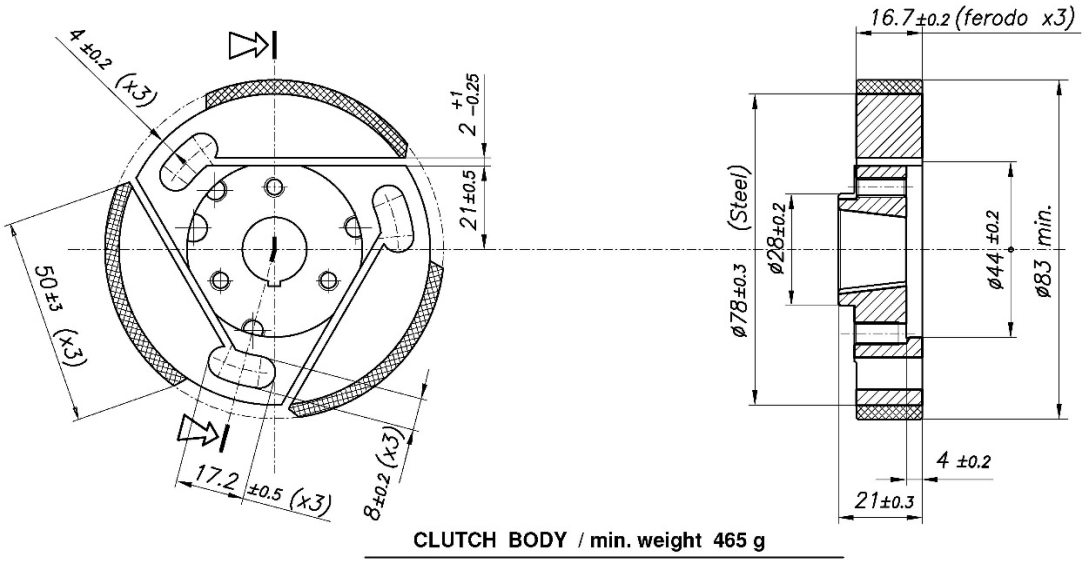

ALTERNATIVE CLUTCH HUB IDENTIFICATION MARKING – TYPE 2

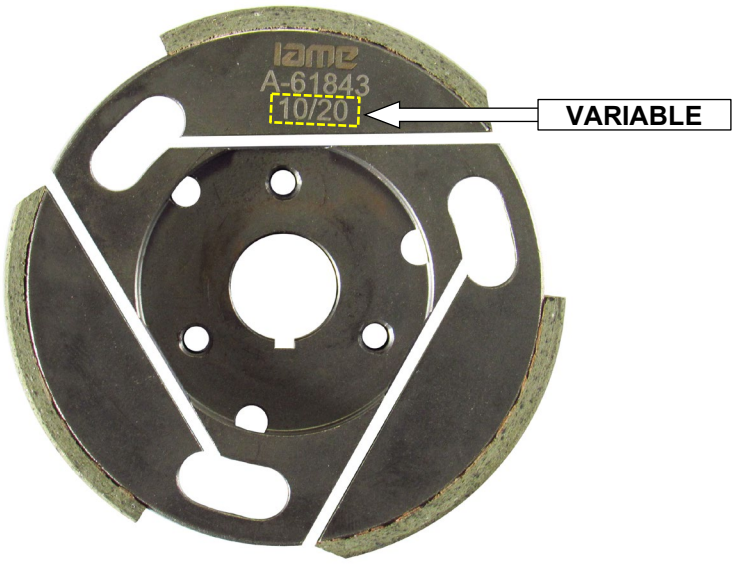

EXHAUST EXIT VIEW AND DIMENSION

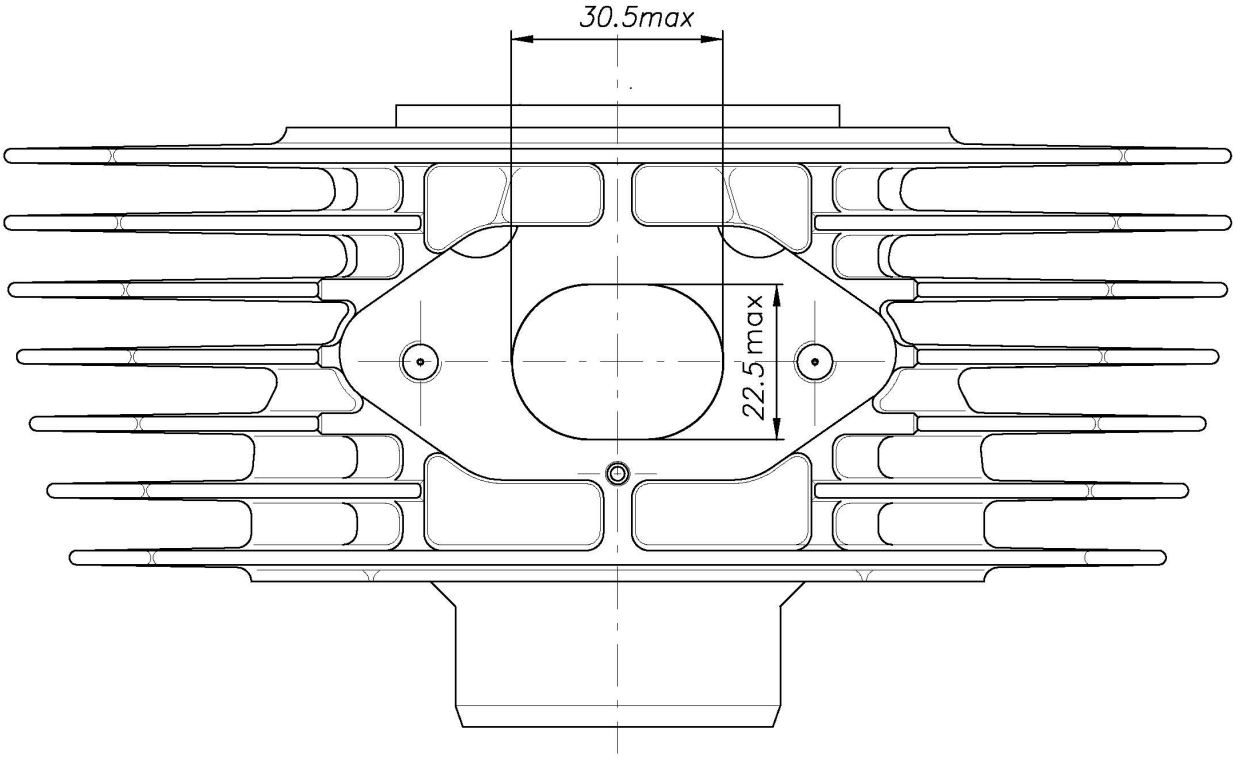

EXHAUST FITTING

Restricted

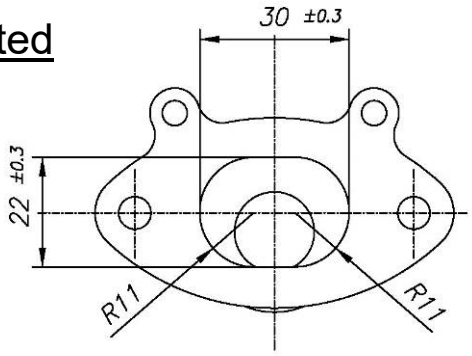

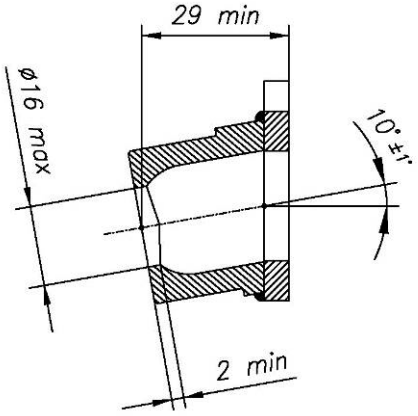

Unrestricted

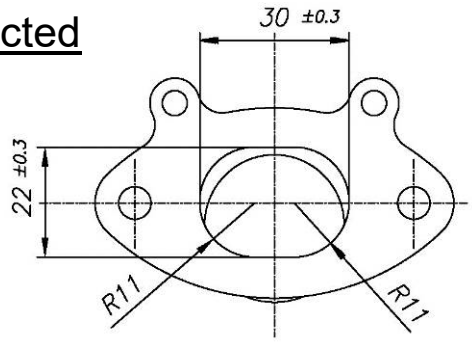

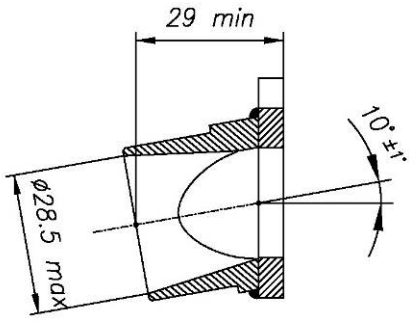

WIRING DIAGRAM

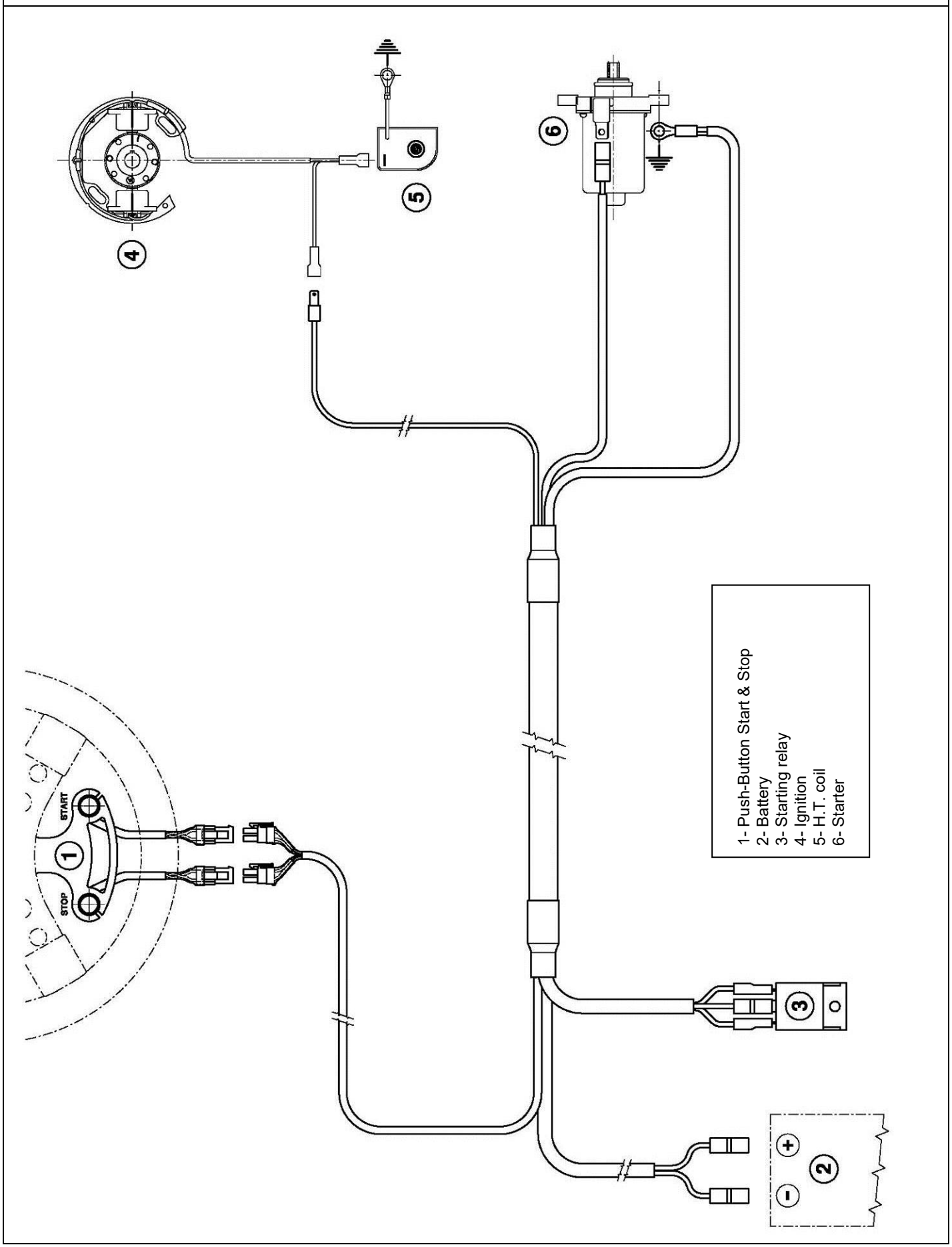

PHOTO COMPLETE WIRING

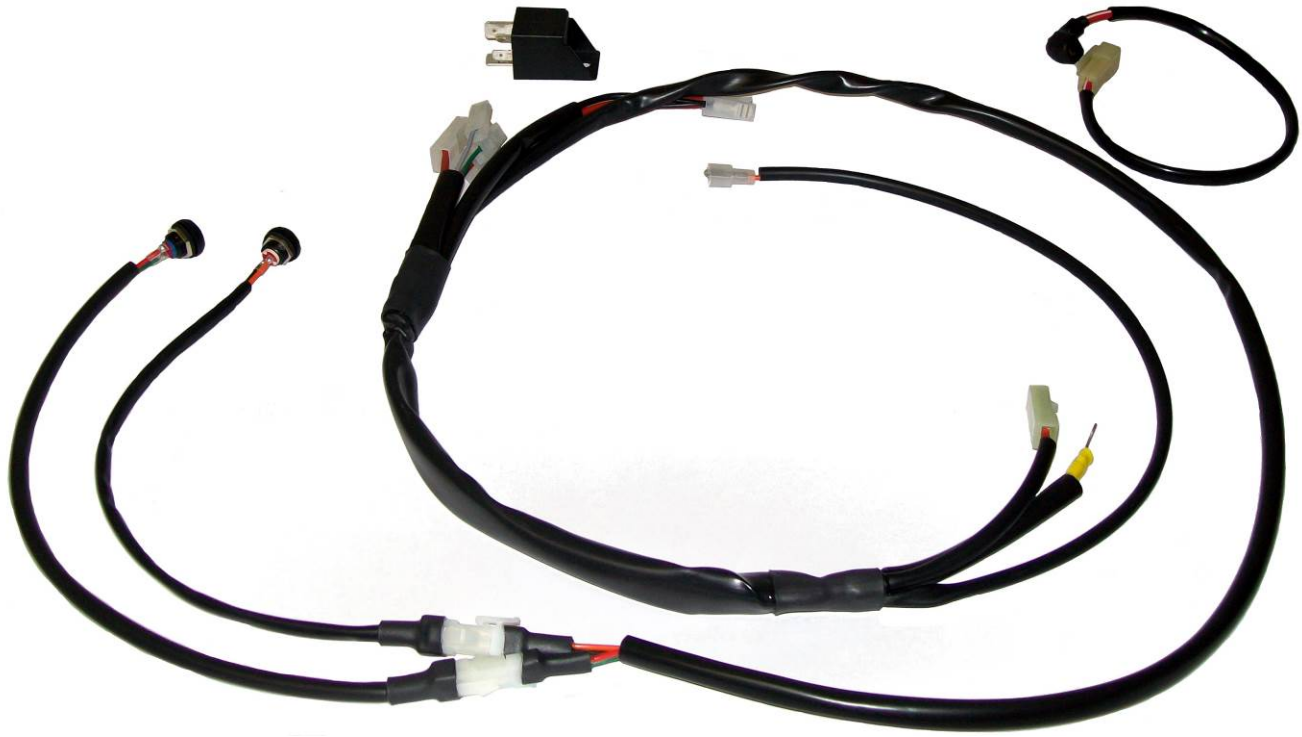

PHOTO OF IGNITION / PHOTO OF H.T. COIL (SELETTRA ANALOGUE 2 POLES)

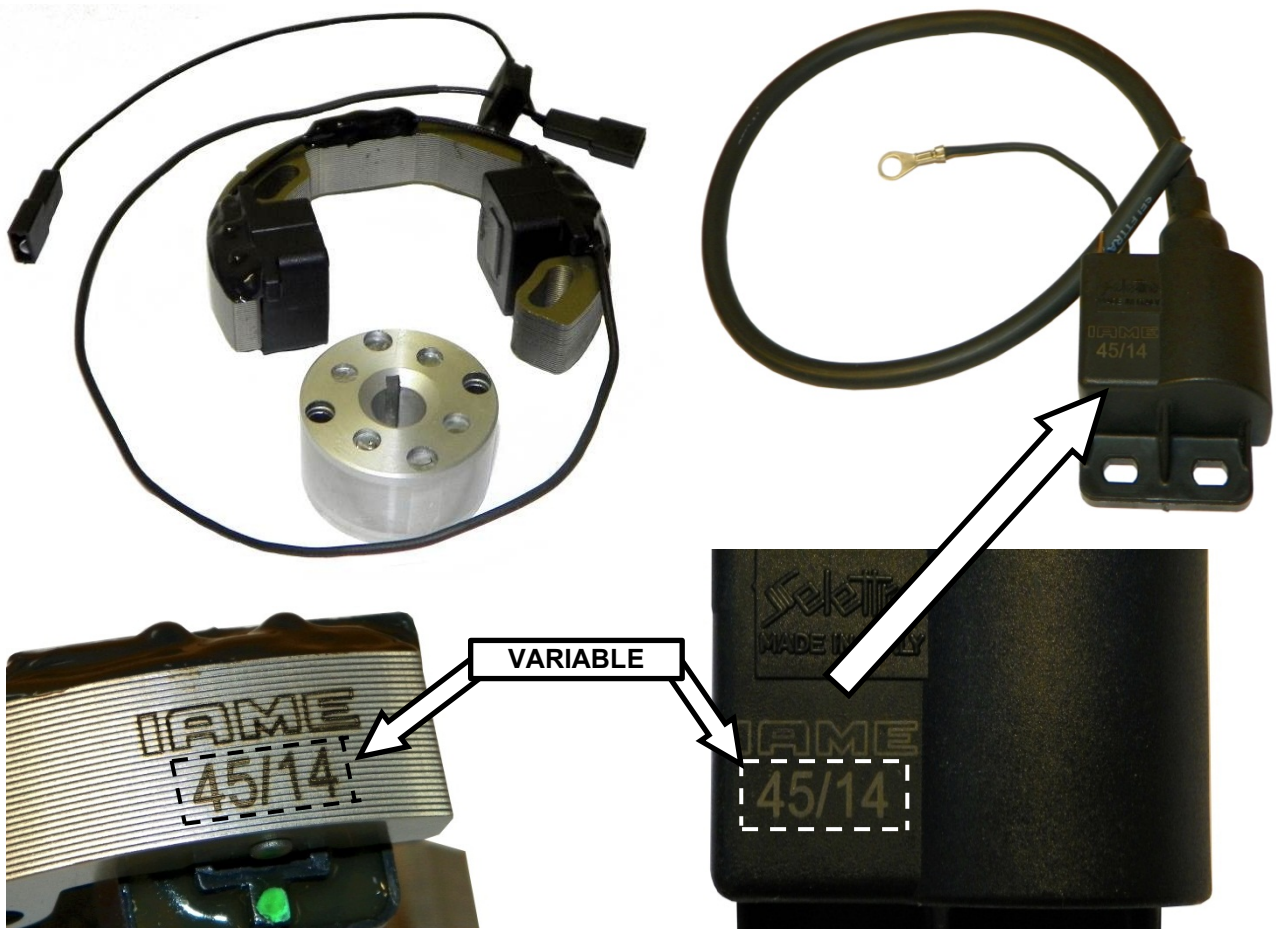

HEAD IDENTIFICATION MARKING	CYLINDER IDENTIFICATION UPPER MARKING
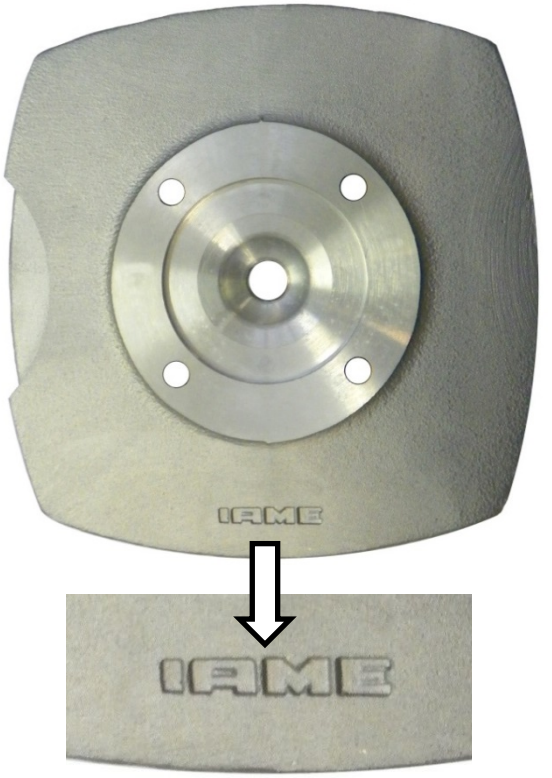	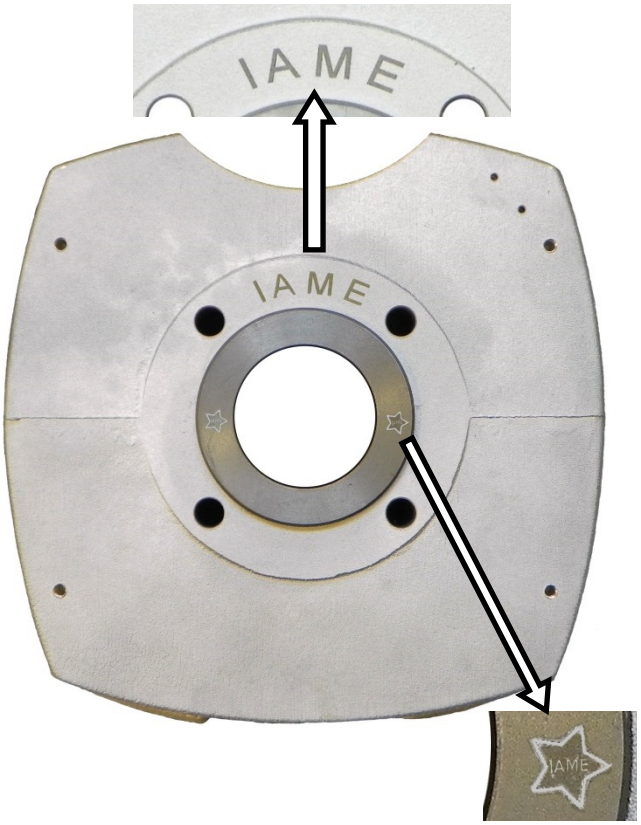
ENGINE STICKER “USA”	CYLINDER IDENTIFICATION LOWER MARKING
	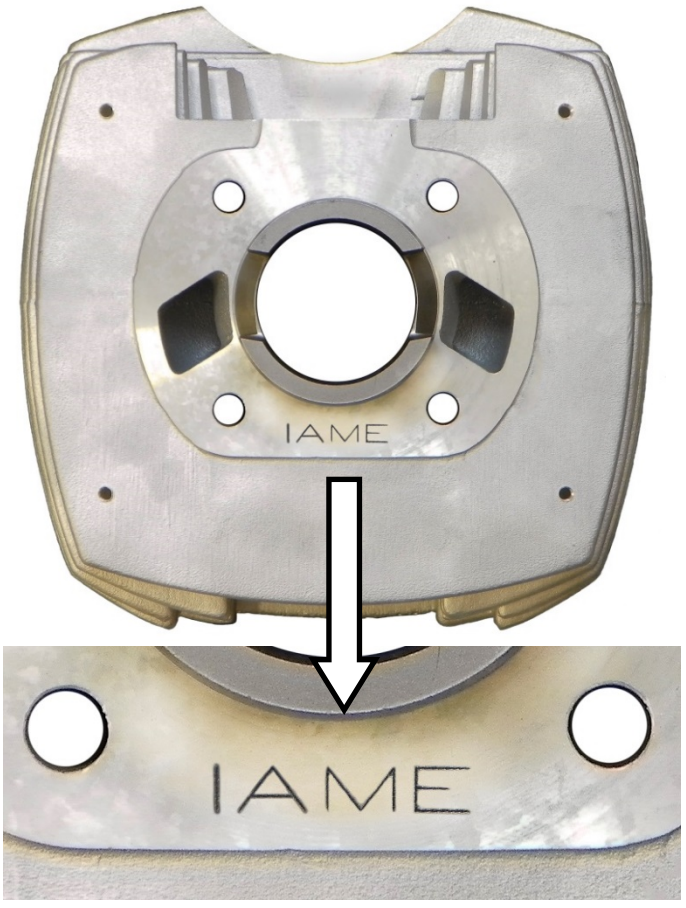

SEMICARTER IGNITION SIDE AND TRANSMISSION SIDE IDENTIFICATION MARKING

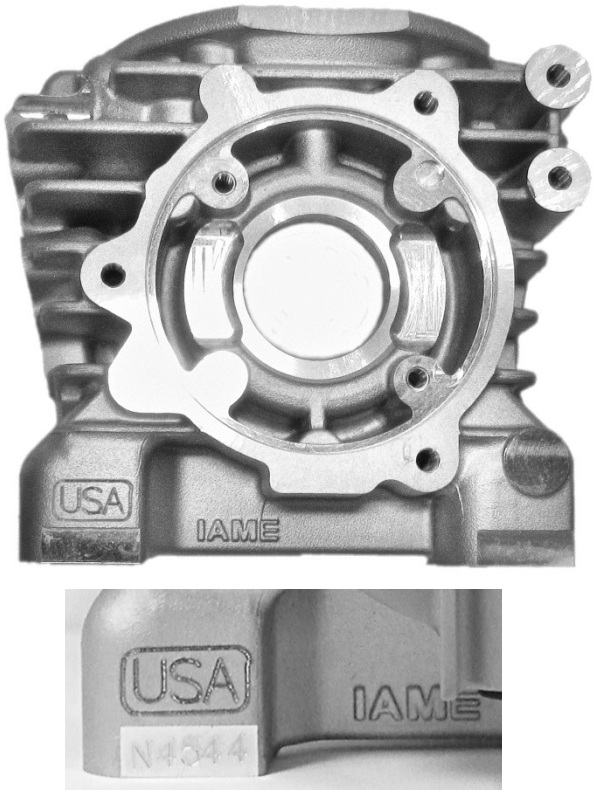

STARTER RING IDENTIFICATION MARKING

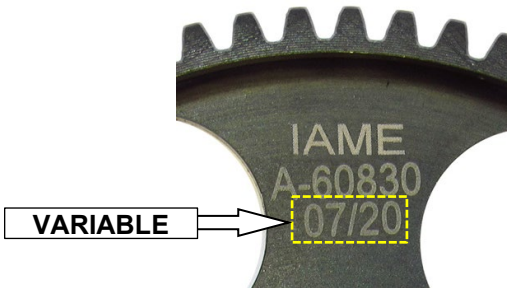

CRANKSHAFT IDENTIFICATION MARKINGS	CONROD AND PISTON IDENTIFICATION MARKINGS
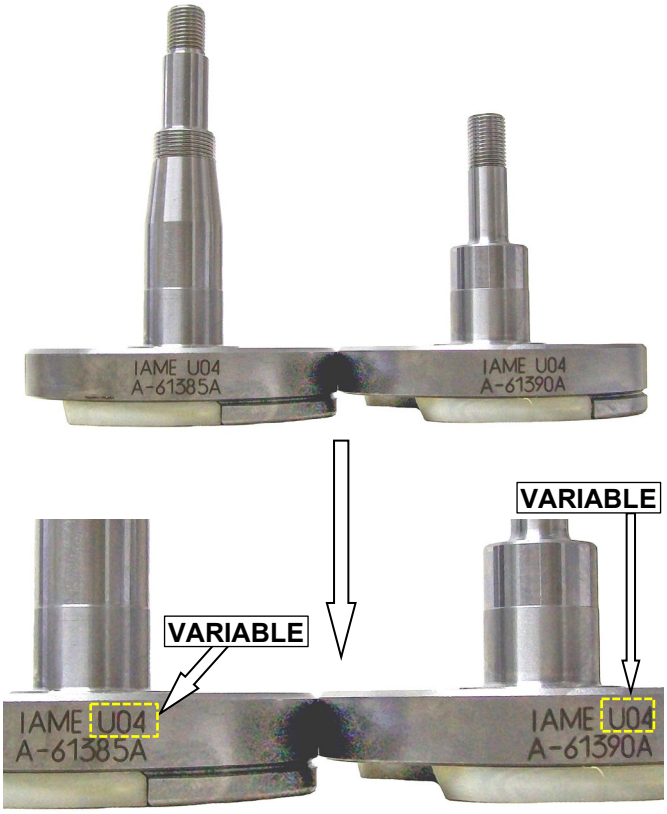	
CLUTCH HUB IDENTIFICATION MARKING TYPE 1	CLUTCH DRUM IDENTIFICATION MARKING
	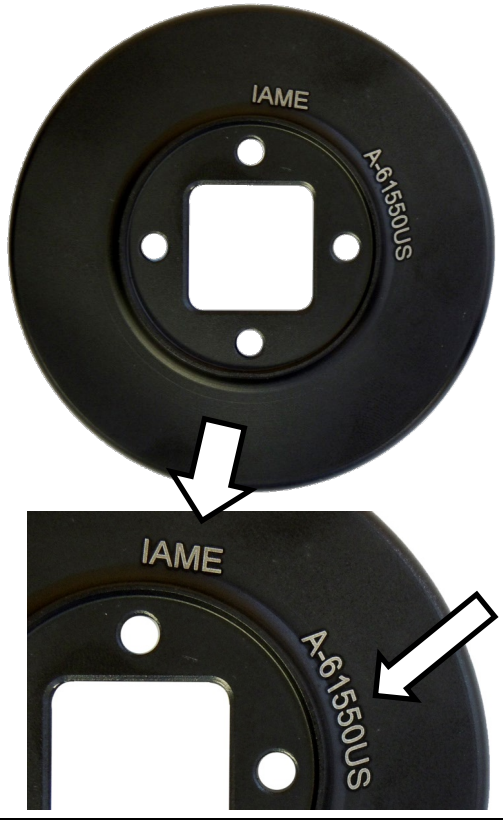

CRANKSHAFT PHOTOS

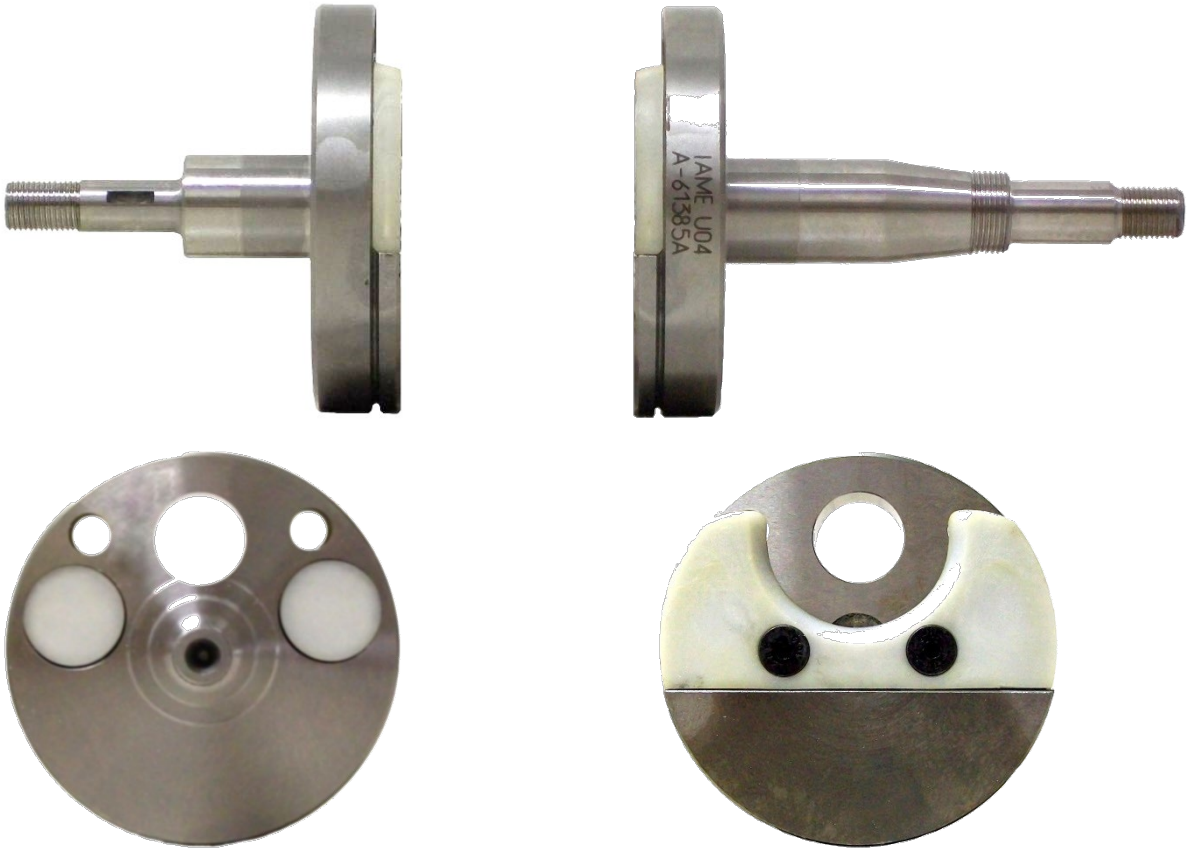

PHOTO OF COMPLETE CRANKSHAFT	EXHAUST IDENTIFICATION MARKING

IGNITION COVER IDENTIFICATION MARKING	CLUTCH COVER IDENTIFICATION MARKING
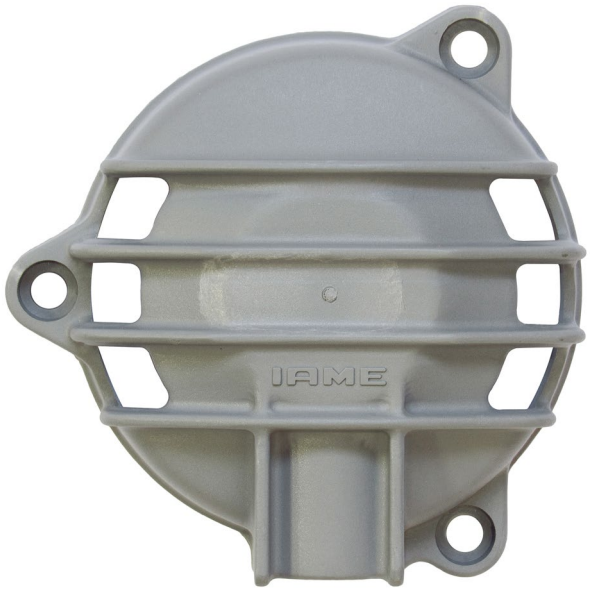	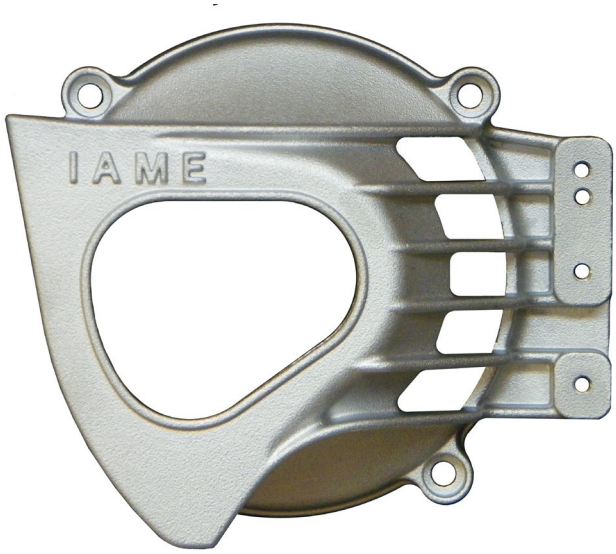

INLET FILTER IDENTIFICATION MARKING

PHOTO IDENTIFICATION OF CONROD – TYPES ALTERNATIVE

TYPE 1

TYPE 2

PARTICULARS WITH ALTERNATIVE NEW LOGO “IAME”

CYLINDER

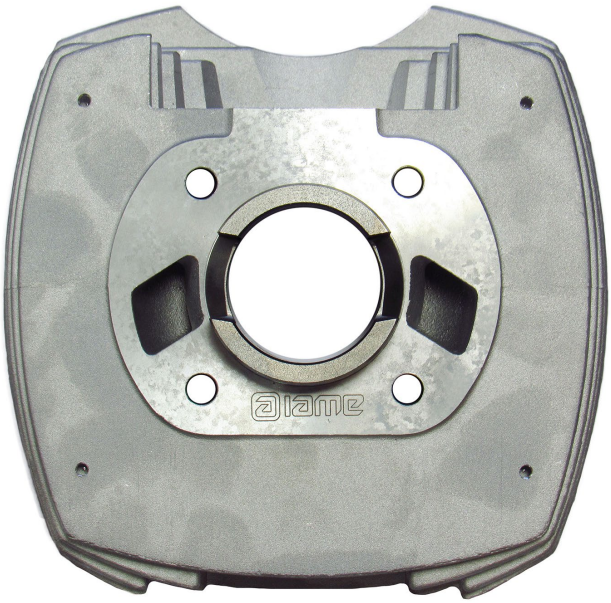

NEW LOGO

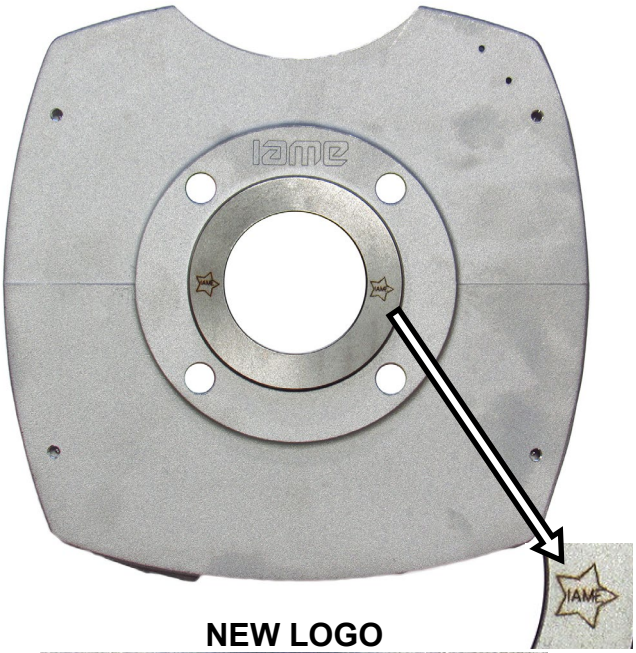

NEW LOGO

CYLINDER HEAD

NEW LOGO

PARTICULARS WITH ALTERNATIVE NEW LOGO “IAME”

SEMICARTER IGNITION SIDE

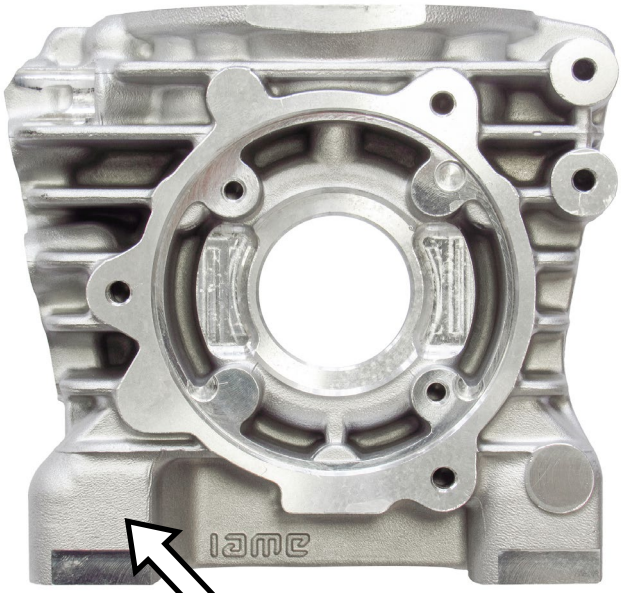

NEW LOGO

FROM 2021 NO “USA” MARKING

SEMICARTER TRANSMISSION SIDE

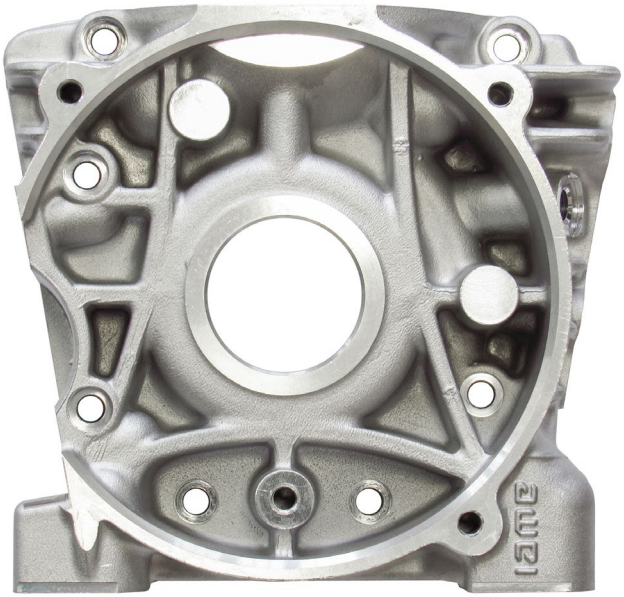

NEW LOGO

PARTICULARS WITH ALTERNATIVE NEW LOGO “IAME”

CLUTCH HUB

NEW LOGO

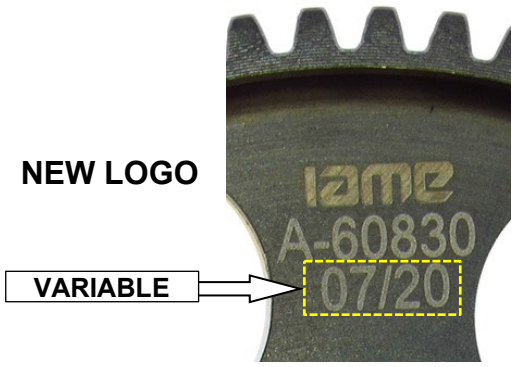

CLUTCH HUB – TYPE 1

NEW LOGO

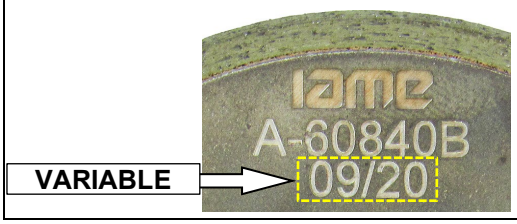

CLUTCH DRUM

NEW LOGO

PARTICULARS WITH ALTERNATIVE NEW LOGO “IAME”

IGNITION COVER	CLUTCH COVER
NEW LOGO	**NEW LOGO**
INLET FILTER	**EXHAUST**
NEW LOGO	**NEW LOGO**

PARTICULARS WITH ALTERNATIVE NEW LOGO “IAME”

THE OTHERS COMPONENTS OF ENGINE THAT ARE MARKED (LASER OR PUNCHING) UNTIL TODAY WITH LOGO OR WRITTEN “IAME”

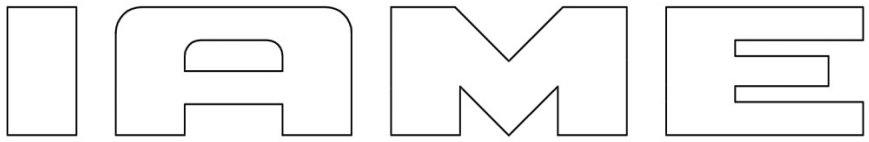

or

IAME

NOW COULD BE MARKED WITH NEW LOGO “IAME”

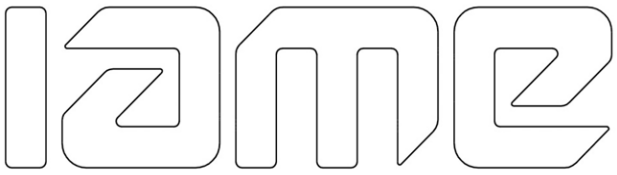

or

or

CARBURETTOR

Tillotson HW-31A

	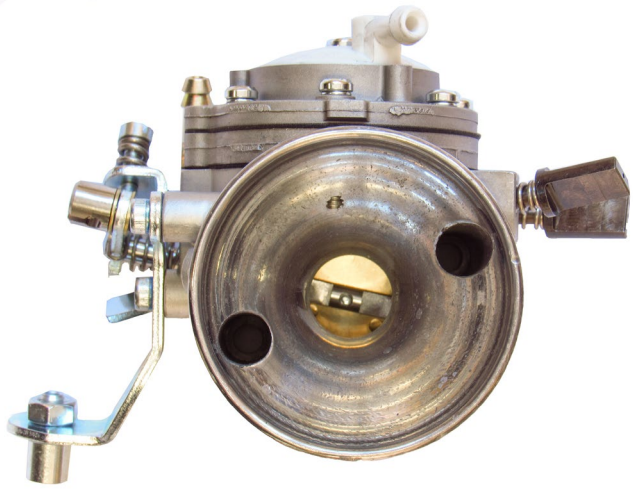
PHOTO OF ADJUSTING SIDE	PHOTO OF INLET SIDE

Manufacturer	**TILLOTSON LTD.**
Make	**TILLOTSON**
Model	**HW-31A**

SECTION VIEW

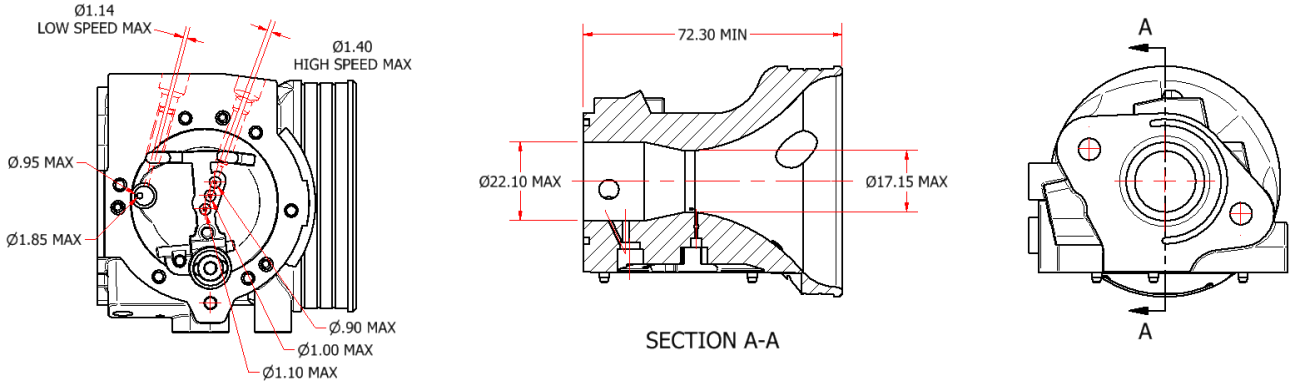

"IAME" MARKING

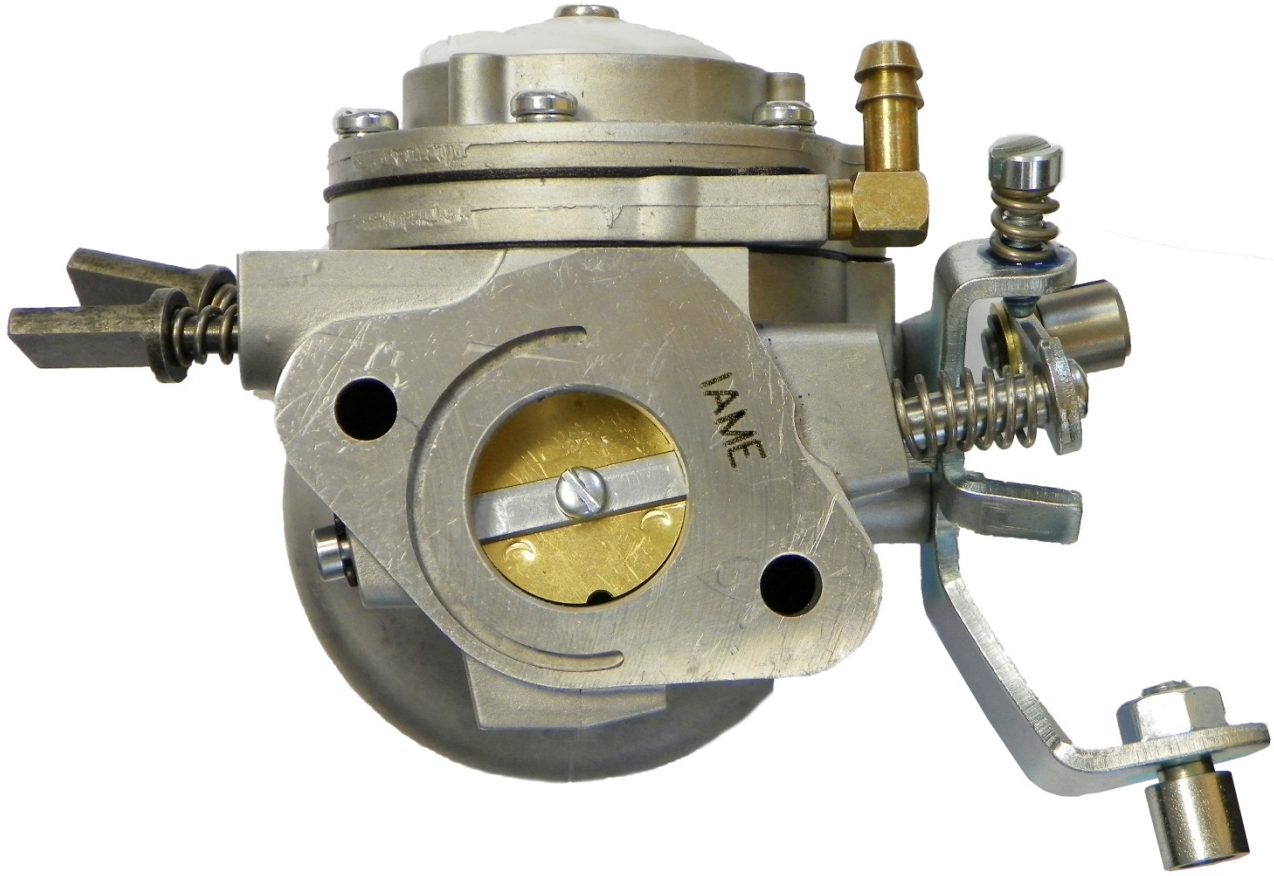

HW-31A

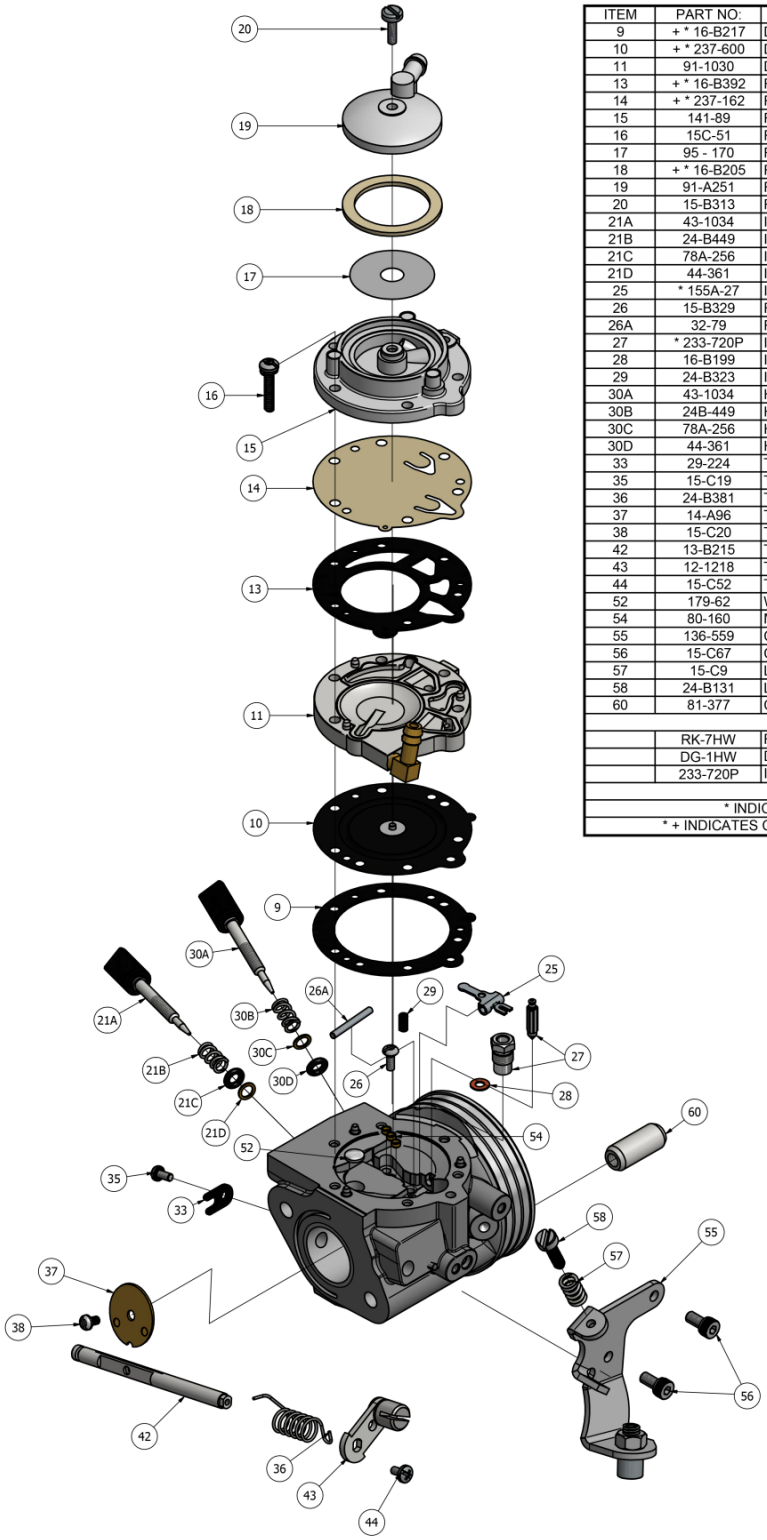

ITEM	PART NO:	DESCRIPTION	QTY
9	+ * 16-B217	DIAPHRAGM GASKET	1
10	+ * 237-600	DIAPHRAGM	1
11	91-1030	DIAPHRAGM COVER	1
13	+ * 16-B392	FUEL PUMP GASKET	1
14	+ * 237-162	FUEL PUMP DIAPHRAGM	1
15	141-89	FUEL PUMP BODY	1
16	15C-51	FUEL PUMP BODY SCREW	6
17	95 - 170	FUEL STRAINER SCREEN	1
18	+ * 16-B205	FUEL STRAINER COVER GASKET	1
19	91-A251	FUEL STRAINER COVER	1
20	15-B313	FUEL STRAINER COVER RETAINING SCREW	1
21A	43-1034	IDLE MIXTURE SCREW	1
21B	24-B449	IDLE MIXTURE SCREW SPRING	1
21C	78A-256	IDLE MIXTURE SCREW WASHER	1
21D	44-361	IDLE MIXTURE SCREW PACKING	1
25	* 155A-27	INLET CONTROL LEVER	1
26	15-B329	FULCRUM LEVER SCREW	1
26A	32-79	FULCRUM LEVER PIN	1
27	* 233-720P	INLET NEEDLE & SEAT SET	1
28	16-B199	INLET SEAT GASKET	1
29	24-B323	INLET TENSION SPRING	1
30A	43-1034	HIGH SPEED MIXTURE SCREW	1
30B	24B-449	HIGH SPEED MIXTURE SCREW SPRING	1
30C	78A-256	HIGH SPEED MIXTURE SCREW WASHER	1
30D	44-361	HIGH SPEED MIXTURE SCREW PACKING	1
33	29-224	THROTTLE SHAFT CLIP	1
35	15-C19	THROTTLE SHAFT CLIP RETAINING SCREW	1
36	24-B381	THROTTLE RETURN SPRING	1
37	14-A96	THROTTLE SHUTTER	1
38	15-C20	THROTTLE SHUTTER SCREW	1
42	13-B215	THROTTLE SHAFT	1
43	12-1218	THROTTLE LEVER ASSEMBLY	1
44	15-C52	THROTTLE LEVER RETAINING SCREW	1
52	179-62	WELCH PLUG	1
54	80-160	MAIN PLUG	3
55	136-559	CABLE BRAKET	1
56	15-C67	CABLE BRACKET RETAINING SCREW	2
57	15-C9	LIMITER SCREW	2
58	24-B131	LIMITER SPRING	2
60	81-377	CARBURETTOR MOUNTING NUT	2
	RK-7HW	REPAIR KIT	
	DG-1HW	DIAPHRAGM & GASKET (STANDARD)	
	233-720P	INLET NEEDLE & SEAT SET	
* INDICATES CONTENTS OF REPAIR KIT			
* + INDICATES CONTENTS OF DIAPHRAGM & GASKET SET			

Tillotson RACING
Clash Industrial Estate - Tralee - Ireland
www.tillotson-racing,com

PARTS OF CARBURETTOR

REF.9 - P. N°16-B217
DIAPHRAGM GASKET

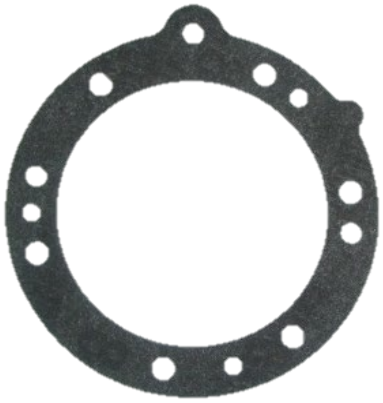

Thickness = 0.5 ±0.1 mm

PUMP DIAPHRAGM GASKET
REF.13 - P. N° 16-B392

Thickness = 0.8 ±0.1 mm

REF.10 - P. N°237-600
DIAPHRAGM

Thickness = 0.13 ±0.07 mm

REF.14 - P. N°237-162
PUMP DIAPHRAGM

Thickness = 0.10 ±0.063 mm

REF.11 - P. N° 91-1031
DIAPHRAGM COVER

Thickness = 6.75 ±0.15 mm

REF.15 - P. N° 141-89
PUMP COVER

Thickness = 12.5 ±0.15 mm

REF.37 - P. N° 14-A96
THROTTLE SHUTTER

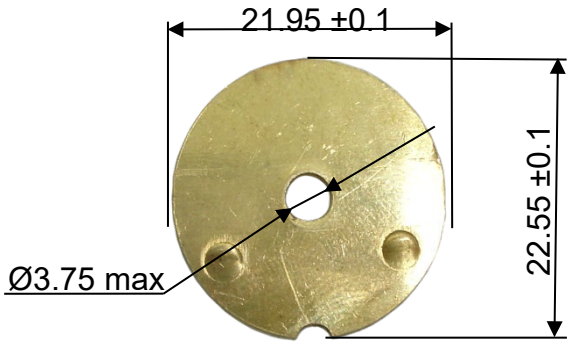

Thickness = 0.81 ±0.1 mm

REF.27 - P. N° 233-720P
SEAT + NEEDLE

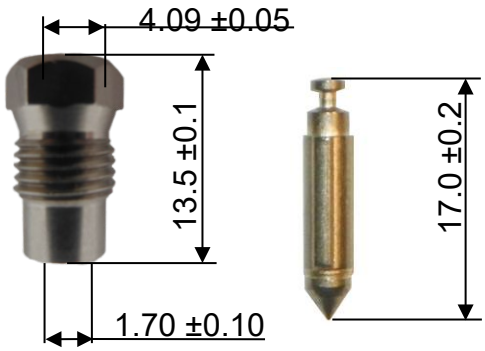

REF.21A - P. N° 43-1034
NEEDLE LOW SPEED

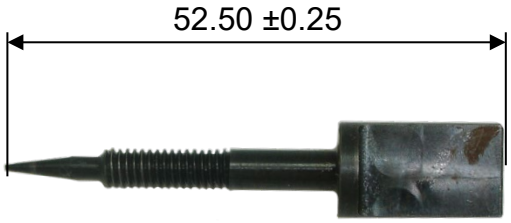

REF.30A - P. N° 43-1034
NEEDLE HIGH SPEED

NEEDLE FUEL ALTERNATIVE

REF.27 - P. N° 233-720P

HOLE FOR CARBURETTOR SEALING
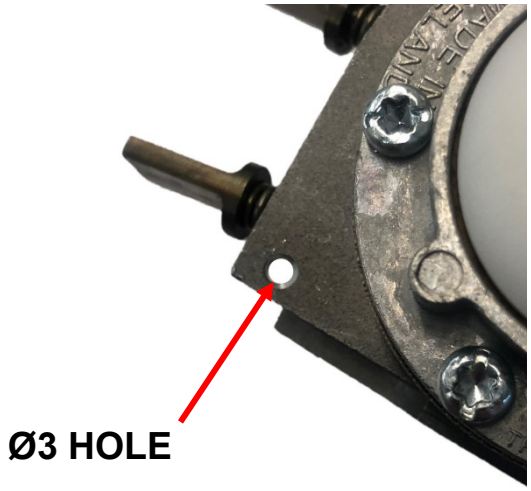
The carburettor can have this hole for sealing.